AXIOM

BACKS

SIZING GUIDE

Ki Mobility

AXIOM

BACKS

Posterior Lateral and Lateral (AXPL & AXLB) Sizing Guide

Posterior Lateral Back (AXPL) & Lateral Back (AXLB)

Low									Mid									Tall								
Assy	A	B	C	D	E	F	G	H	Assy	A	B	C	D	E	F	G	H	Assy	A	B	C	D	E	F	G	H
AXPL/LB1208	10	6.5	12" - 14"	8	9.8	8.9	3.5	3.65	AXPL/LB1214	16	8.5	12" - 14"	14	9.8	8.9	3.5	3.65	AXPL/LB1220	22	11.5	12" - 14"	20	9.8	8.9	3.5	3.65
AXPL/LB1210	12	8.5	12" - 14"	10	9.8	8.9	3.5	3.65	AXPL/LB1216	18	9.5	12" - 14"	16	9.8	8.9	3.5	3.65	AXPL/LB1222	24	12.5	12" - 14"	22	9.8	8.9	3.5	3.65
AXPL/LB1212	14	10.5	12" - 14"	12	9.8	8.9	3.5	3.65	AXPL/LB1218	20	10.5	12" - 14"	18	9.8	8.9	3.5	3.65	AXPL/LB1420	22	11.5	14" - 16"	20	11.8	10.9	3.5	3.65
AXPL/LB1408	10	6.5	14" - 16"	8	12	10.9	3.5	3.65	AXPL/LB1414	16	8.5	14" - 16"	14	12	10.9	3.5	3.65	AXPL/LB1422	24	12.5	14" - 16"	22	11.8	10.9	3.5	3.65
AXPL/LB1410	12	8.5	14" - 16"	10	12	10.9	3.5	3.65	AXPL/LB1416	18	9.5	14" - 16"	16	12	10.9	3.5	3.65	AXPL/LB1620	22	11.5	16" - 18"	20	13.8	12.9	3.5	3.65
AXPL/LB1412	14	10.5	14" - 16"	12	12	10.9	3.5	3.65	AXPL/LB1418	20	10.5	14" - 16"	18	12	10.9	3.5	3.65	AXPL/LB1622	24	12.5	16" - 18"	22	13.8	12.9	3.5	3.65
AXPL/LB1608	10	6.5	16" - 18"	8	14	12.9	3.5	3.65	AXPL/LB1614	16	8.5	16" - 18"	14	14	12.9	3.5	3.65	AXPL/LB1820	22	11.5	18" - 20"	20	15.8	14.9	3.5	3.65
AXPL/LB1610	12	8.5	16" - 18"	10	14	12.9	3.5	3.65	AXPL/LB1616	18	9.5	16" - 18"	16	14	12.9	3.5	3.65	AXPL/LB1822	24	12.5	18" - 20"	22	15.8	14.9	3.5	3.65
AXPL/LB1612	14	10.5	16" - 18"	12	14	12.9	3.5	3.65	AXPL/LB1618	20	10.5	16" - 18"	18	14	12.9	3.5	3.65	AXPL/LB2020	22	11.5	20" - 22"	20	17.8	16.9	3.5	3.65
AXPL/LB1808	10	6.5	18" - 20"	8	16	14.9	3.5	3.65	AXPL/LB1814	16	8.5	18" - 20"	14	16	14.9	3.5	3.65	AXPL/LB2022	24	12.5	20" - 22"	22	17.8	16.9	3.5	3.65
AXPL/LB1810	12	8.5	18" - 20"	10	16	14.9	3.5	3.65	AXPL/LB1816	18	9.5	18" - 20"	16	16	14.9	3.5	3.65	AXPL/LB2220	22	11.5	22" - 24"	20	19.8	18.9	3.5	3.65
AXPL/LB1812	14	10.5	18" - 20"	12	16	14.9	3.5	3.65	AXPL/LB1818	20	10.5	18" - 20"	18	16	14.9	3.5	3.65	AXPL/LB2222	24	12.5	22" - 24"	22	19.8	18.9	3.5	3.65
AXPL/LB2008	10	6.5	20" - 22"	8	18	16.9	3.5	3.65	AXPL/LB2014	16	8.5	20" - 22"	14	18	16.9	3.5	3.65									
AXPL/LB2010	12	8.5	20" - 22"	10	18	16.9	3.5	3.65	AXPL/LB2016	18	9.5	20" - 22"	16	18	16.9	3.5	3.65									
AXPL/LB2012	14	10.5	20" - 22"	12	18	16.9	3.5	3.65	AXPL/LB2018	20	10.5	20" - 22"	18	18	16.9	3.5	3.65									
AXPL/LB2208	10	6.5	22" - 24"	8	20	18.9	3.5	3.65	AXPL/LB2214	16	8.5	22" - 24"	14	20	18.9	3.5	3.65									
AXPL/LB2210	12	8.5	22" - 24"	10	20	18.9	3.5	3.65	AXPL/LB2216	18	9.5	22" - 24"	16	20	18.9	3.5	3.65									
AXPL/LB2212	14	10.5	22" - 24"	12	20	18.9	3.5	3.65	AXPL/LB2218	20	10.5	22" - 24"	18	20	18.9	3.5	3.65									

A - Height of Foam
B - Apex of Lateral
C - Back Cane Distance
D - Height of Shell
E - Width of Shell
F - Width of Foam
G - Depth of Shell
H - Depth of Foam

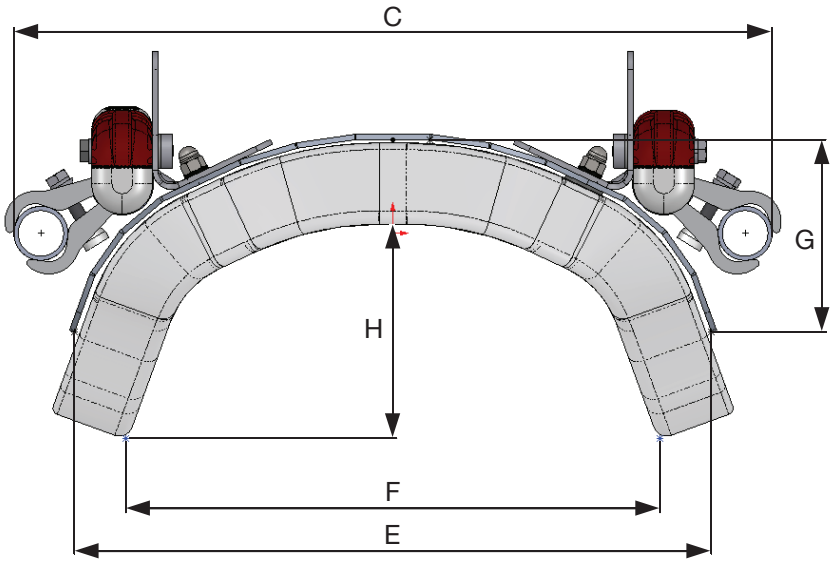

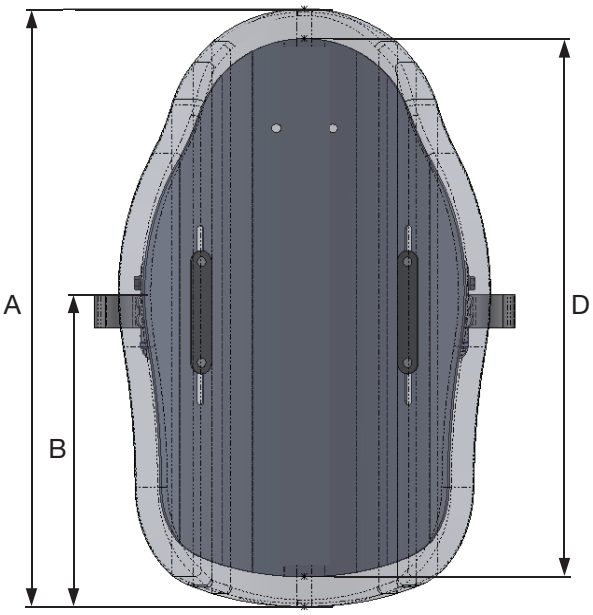

AXIOM

BACKS

Deep Lateral (AXDL) Sizing Guide

Deep Lateral Back (AXDL)																		
Mid									Tall									
Assy	A	B	C	D	E	F	G	H	Assy	A	B	C	D	E	F	G	H
AXDL1214	16	8.25	12" - 14"	14	10.5	8.8	5.9	6	AXDL1220	22	9.5 - 9.75	12" - 14"	20	10.5	8.8	5.9	6
AXDL1216	18	9.25	12" - 14"	16	10.5	8.8	5.9	6	AXDL1222	24	10.75 - 11	12" - 14"	22	10.5	8.8	5.9	6
AXDL1218	20	10.25	12" - 14"	18	10.5	8.8	5.9	6	AXDL1420	22	9.75 - 10	14" - 16"	20	12.5	10.8	5.9	6
AXDL1414	16	8.25	14" - 16"	14	12.5	10.8	5.9	6	AXDL1422	24	11 - 11.25	14" - 16"	22	12.5	10.8	5.9	6
AXDL1416	18	9.25	14" - 16"	16	12.5	10.8	5.9	6	AXDL1620	22	10 - 10.25	16" - 18"	20	14.5	12.8	5.9	6
AXDL1418	20	10.25	14" - 16"	18	12.5	10.8	5.9	6	AXDL1622	24	11.25 - 11.5	16" - 18"	22	14.5	12.8	5.9	6
AXDL1614	16	8.25	16" - 18"	14	14.5	12.8	5.9	6	AXDL1820	22	10.25	18" - 20"	20	16.5	14.8	5.9	6
AXDL1616	18	9.25	16" - 18"	16	14.5	12.8	5.9	6	AXDL1822	24	11.5	18" - 20"	22	16.5	14.8	5.9	6
AXDL1618	20	10.25	16" - 18"	18	14.5	12.8	5.9	6	AXDL2020	22	10.25 - 10.5	20" - 22"	20	18.5	16.8	5.9	6
AXDL1814	16	8.25	18" - 20"	14	16.5	14.8	5.9	6	AXDL2022	24	11.5 - 11.75	20" - 22"	22	18.5	16.8	5.9	6
AXDL1816	18	9.25	18" - 20"	16	16.5	14.8	5.9	6	AXDL2222	24	11.75	22" - 24"	22	20.5	18.8	5.9	6
AXDL1818	20	10.25	18" - 20"	18	16.5	14.8	5.9	6									
AXDL2014	16	8.25	20" - 22"	14	18.5	16.8	5.9	6									
AXDL2016	18	9.25	20" - 22"	16	18.5	16.8	5.9	6									
AXDL2018	20	10.25	20" - 22"	18	18.5	16.8	5.9	6									
AXDL2214	16	8.25	22" - 24"	14	20.5	18.8	5.9	6									
AXDL2216	18	9.25	22" - 24"	16	20.5	18.8	5.9	6									
AXDL2218	20	10.25	22" - 24"	18	20.5	18.8	5.9	6									

A - Height of Foam
B - Apex of Lateral
C - Back Cane Distance
D - Height of Shell
E - Width of Shell
F - Width of Foam
G - Depth of Shell
H - Depth of Foam

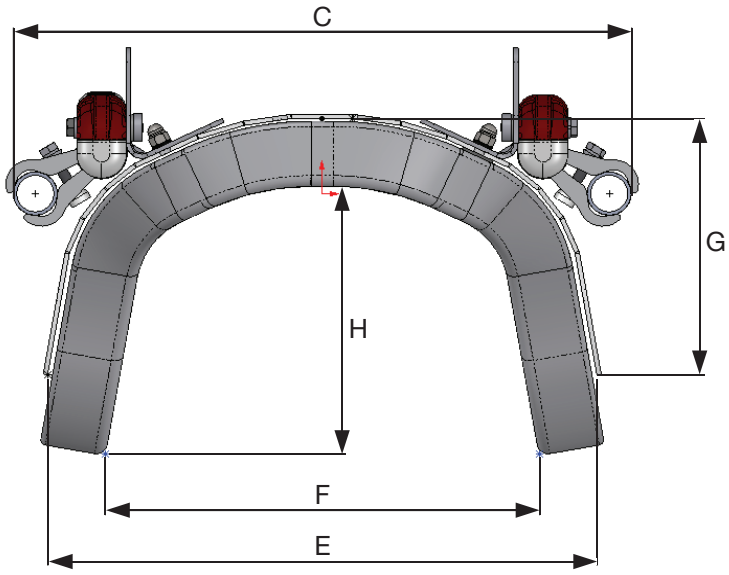

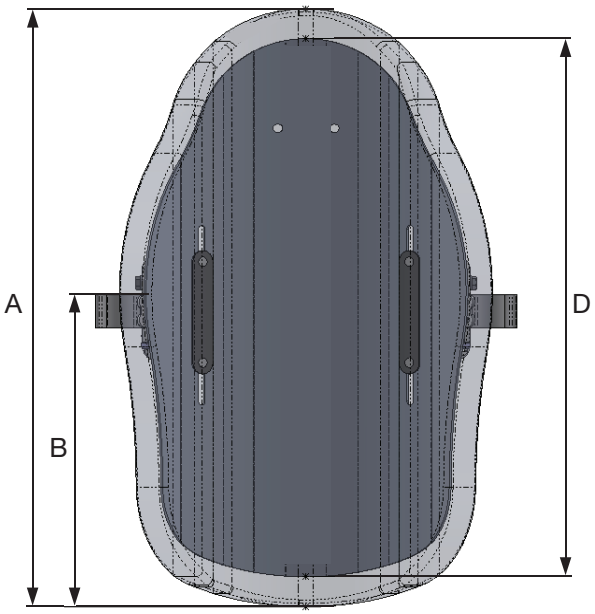

AXIOM

BACKS

Posterior Back (AXPB) Sizing Guide

Posterior Back (AXPB)																	
Low									Mid								
Assy	A	B	C	D	E	F	G	H	Assy	A	B	C	D	E	F	G	H
AXPB1208	10	6.5	12" - 14"	8	8.9	9.7	2.1	2.25	AXPB1214	16	8.5	12" - 14"	14	8.9	9.7	2.1	2.3
AXPB1210	12	8.5	12" - 14"	10	8.9	9.7	2.1	2.25	AXPB1216	18	9.5	12" - 14"	16	8.9	9.7	2.1	2.3
AXPB1212	14	11	12" - 14"	12	8.9	9.7	2.1	2.25	AXPB1218	20	11	12" - 14"	18	8.9	9.7	2.1	2.3
AXPB1408	10	6.5	14" - 16"	8	11	12	2.1	2.25	AXPB1414	16	8.5	14" - 16"	14	11	12	2.1	2.3
AXPB1410	12	8.5	14" - 16"	10	11	12	2.1	2.25	AXPB1416	18	9.5	14" - 16"	16	11	12	2.1	2.3
AXPB1412	14	11	14" - 16"	12	11	12	2.1	2.25	AXPB1418	20	11	14" - 16"	18	11	12	2.1	2.3
AXPB1608	10	6.5	16" - 18"	8	13	14	2.1	2.25	AXPB1614	16	8.5	16" - 18"	14	13	14	2.1	2.3
AXPB1610	12	8.5	16" - 18"	10	13	14	2.1	2.25	AXPB1616	18	9.5	16" - 18"	16	13	14	2.1	2.3
AXPB1612	14	11	16" - 18"	12	13	14	2.1	2.25	AXPB1618	20	11	16" - 18"	18	13	14	2.1	2.3
AXPB1808	10	6.5	18" - 20"	8	15	16	2.1	2.25	AXPB1814	16	8.5	18" - 20"	14	15	16	2.1	2.3
AXPB1810	12	8.5	18" - 20"	10	15	16	2.1	2.25	AXPB1816	18	9.5	18" - 20"	16	15	16	2.1	2.3
AXPB1812	14	11	18" - 20"	12	15	16	2.1	2.25	AXPB1818	20	11	18" - 20"	18	15	16	2.1	2.3
AXPB2008	10	6.5	20" - 22"	8	17	18	2.1	2.25	AXPB2014	16	8.5	20" - 22"	14	17	18	2.1	2.3
AXPB2010	12	8.5	20" - 22"	10	17	18	2.1	2.25	AXPB2016	18	9.5	20" - 22"	16	17	18	2.1	2.3
AXPB2012	14	11	20" - 22"	12	17	18	2.1	2.25	AXPB2018	20	11	20" - 22"	18	17	18	2.1	2.3
AXPB2208	10	6.5	22" - 24"	8	19	20	2.1	2.25	AXPB2214	16	8.5	22" - 24"	14	19	20	2.1	2.3
AXPB2210	12	8.5	22" - 24"	10	19	20	2.1	2.25	AXPB2216	18	9.5	22" - 24"	16	19	20	2.1	2.3
AXPB2212	14	11	22" - 24"	12	19	20	2.1	2.25	AXPB2218	20	11	22" - 24"	18	19	20	2.1	2.3

A - Height of Foam
B - Apex of Lateral
C - Back Cane Distance
D - Height of Shell
E - Width of Shell
F - Width of Foam
G - Depth of Shell
H - Depth of Foam

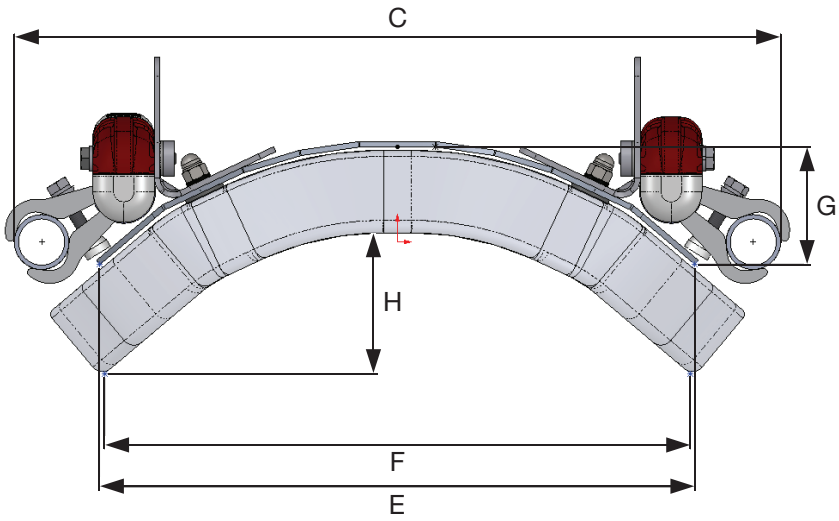

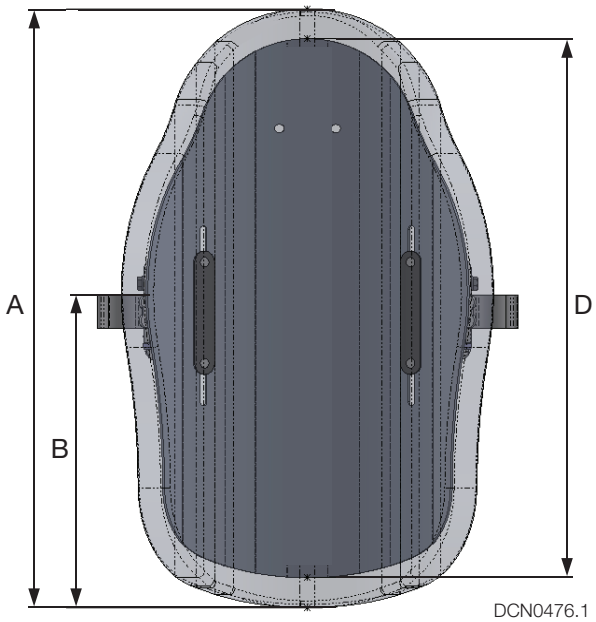

DCN0476.1