Catalyst 5 Drum Brake

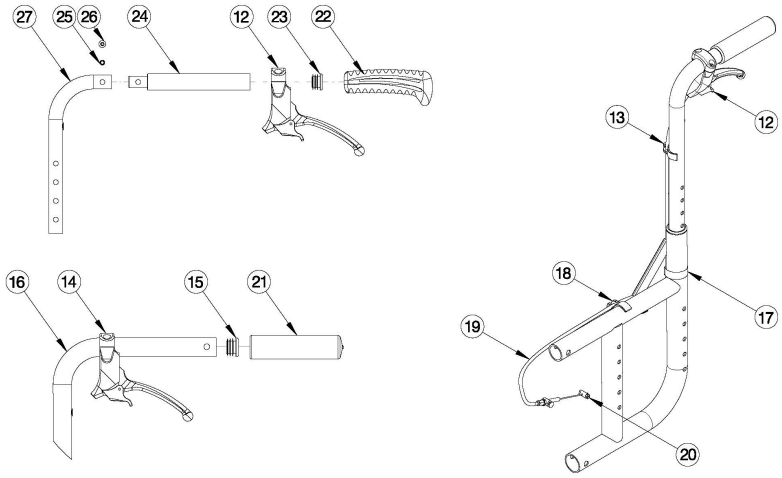

Cable for Backrest Type					
Backrest Height	Stroller Handle & Standard Back Post	Angle Adjustable	Height Adjustable Depth Adjustable		
			Short	Medium	Tall
8.5"	3XS				
9.5"	3XS				
10.5"	3XS				
11.5"	3XS				
12.5"	2XS				
13"			SHT		
13.5"	2XS		SHT		
14"		XS	SHT		
14.5"	2XS		SHT		
15"		XS	SHT		
15.5"	2XS		SHT		
16"		XS	SHT	SHT	
16.5"	XS		SHT	SHT	
17"		XS	SHT	SHT	
17.5"	XS			SHT	
18"		SHT		SHT	
18.5"	XS			SHT	
19"		SHT		SHT	
19.5"	XS			SHT	
20"	SHT	SHT		SHT	MED
21"	SHT				MED
22"	SHT				MED
23"	SHT				MED
24"	MED				MED

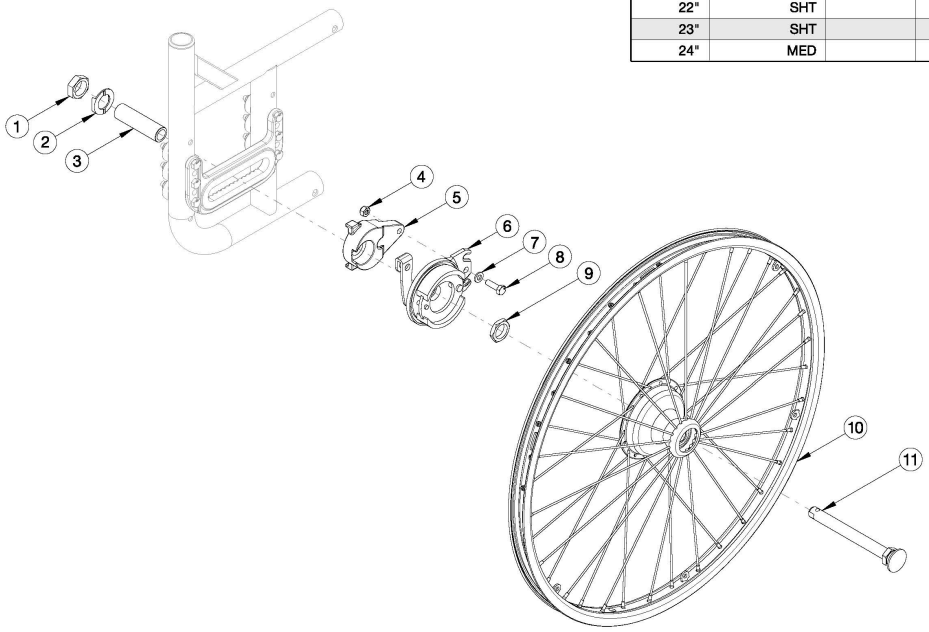

For a complete retrofit, quote a drum brake retrofit kit (qty 1), backtube kit (qty 2) and drum brake cable kit (qty 2) Please see the Catalyst Push and Pull to Lock for complete assembly. Most Drum Brake Retrofit Kits contain two wheels, but do not contain rear tires or handrims. If 24" Pneumatic w/ Airless Insert Tires are needed, please see kit 116568 which includes Pneumatic w/ Airless Insert tires and the inserts but no handrims.

Item Number	Part Number	Description	Quantity
1 - 5, 6a, 6b, 7, 8, 9, 10a, 11, 20	113312	Drum Brake Retrofit Kit 20" MAXX Spoke, Catalyst 5	1
1 - 5, 6a, 6b, 7, 8, 9, 10b, 11, 20	113313	Drum Brake Retrofit Kit 22" MAXX Spoke, Catalyst 5	1

Item Number	Part Number	Description	Quantity
1 - 5, 6a, 6b, 7, 8, 9, 10c, 11, 20	113314	Drum Brake Retrofit Kit 24" MAXX Spoke, Catalyst 5	1
1 - 5, 6a, 6b, 7, 8, 9, 10c, 11, 20	118238	Drum Brake Retrofit Kit 24" MAXX Spoke, Pneumatic w/ Airless Insert Tire (Black), Cat 5 *Replaced part number 116568*	1
22, 23, 24b, 25b, 26b, 27a	113299	Backtube Straight w/ Push Handle Short with Backcane Extension, Drum Brake, Catalyst 5/VX	2
22, 23, 24b, 25b, 26b, 27b	113300	Backtube Straight w/ Push Handle Medium with Backcane Extension, Drum Brake, Catalyst 5/VX	2
22, 23, 24b, 25b, 26b, 27c	113301	Backtube Straight w/ Push Handle Tall with Backcane Extension, Drum Brake, Catalyst 5/VX	2
22, 23, 24b, 25b, 26b, 27d	113302	Backtube 8° Bend w/ Push Handle Medium with Backcane Extension, Drum Brake, Catalyst 5/VX	2
22, 23, 24b, 25b, 26b, 27e	113303	Backtube 8° Bend w/ Push Handle Tall with Backcane Extension, Drum Brake, Catalyst 5/VX	2
22, 23, 24b, 25b, 26b, 27f	113304	Backtube Straight Half Folding Back Upper w/ Push Handle Short with Backcane Extension, Drum Brake, Catalyst 5/VX *This is just the upper backtube assembly. If the Half Folding Backrest is not already present, you will need this kit along with backrest hinge latch assemblies and lower tube found on the Catalyst Half Folding Backrest page.*	2
22, 23, 24b, 25b, 26b, 27g	113305	Backtube Straight Half Folding Back Upper w/ Push Handle Tall with Backcane Extension, Drum Brake, Catalyst 5/VX *This is just the upper backtube assembly. If the Half Folding Backrest is not already present, you will need this kit along with backrest hinge latch assemblies and lower tube found on the Catalyst Half Folding Backrest page.*	2
22, 23, 24b, 25b, 26b, 27h	113306	Backtube 8° Bend Half Folding Back Upper w/ Push Handle Short with Backcane Extension, Drum Brake, Catalyst 5/VX *This is just the upper backtube assembly. If the Half Folding Backrest is not already present, you will need this kit along with backrest hinge latch assemblies and lower tube found on the Catalyst Half Folding Backrest page.*	2
22, 23, 24b, 25b, 26b, 27i	113307	Backtube 8° Bend Half Folding Back Upper w/ Push Handle Tall with Backcane Extension, Drum Brake, Catalyst 5/VX *This is just the upper backtube assembly. If the Half Folding Backrest is not already present, you will need this kit along with backrest hinge latch assemblies and lower tube found on the Catalyst Half Folding Backrest page.*	2
22, 23, 24b, 25b, 26b, 27j	113315	Backtube Angle Adjustable Upper w/ Push Handle Short with Backcane Extension, Drum Brake, Catalyst 5/VX *This is just the upper backtube assembly. If the Angle Adjustable Backrest is not already present, you will need this kit along with the Angle Adjustable Back Post Lower Assembly found on the Catalyst Angle Adjustable Backrest page.*	2
22, 23, 24b, 25b, 26b, 27k	113308	Backtube Angle Adjustable Upper w/ Push Handle Medium with Backcane Extension, Drum Brake, Catalyst 5/VX *This is just the upper backtube assembly. If the Angle Adjustable Backrest is not already present, you will need this kit along with the Angle Adjustable Back Post Lower Assembly found on the Catalyst Angle Adjustable Backrest page.*	2

Item Number	Part Number	Description	Quantity
22, 23, 24b, 25b, 26b, 27l	113309	Backtube Angle Adjustable Upper w/ Push Handle Tall with Backcane Extension, Drum Brake, Catalyst 5/VX *This is just the upper backtube assembly. If the Angle Adjustable Backrest is not already present, you will need this kit along with the Angle Adjustable Back Post Lower Assembly found on the Catalyst Angle Adjustable Backrest page.*	2
22, 23, 24a, 25a, 26a, 27m	113316	Backtube Depth Adj Height Adj Upper w/ Push Handle Short with Backcane Extension, Drum Brake, Catalyst 5 *This is just the upper backtube assembly. If the Height Adjustable Straight with Push Handle is not already present, you will need this kit along with retrofitting to the Catalyst Height Adjustable Straight with Push Handle (Depth Adjustable) Backrest (Kit 118429).*	2
22, 23, 24a, 25a, 26a, 27n	113310	Backtube Depth Adj Height Adj Upper w/ Push Handle Medium with Backcane Extension, Drum Brake, Catalyst 5 *This is just the upper backtube assembly. If the Height Adjustable Straight with Push Handle is not already present, you will need this kit along with retrofitting to the Catalyst Height Adjustable Straight with Push Handle (Depth Adjustable) Backrest (Kit 118430).*	2
22, 23, 24a, 25a, 26a, 27o	113311	Backtube Depth Adj Height Adj Upper w/ Push Handle Tall with Backcane Extension, Drum Brake, Catalyst 5 *This is just the upper backtube assembly. If the Height Adjustable Straight with Push Handle is not already present, you will need this kit along with retrofitting to the Catalyst Height Adjustable Straight with Push Handle (Depth Adjustable) Backrest (Kit 118431.*	2
12, 13, 17, 18, 19a, 20	113292	Drum Brake Cable Kit with Brake Lever for 7/8" Tubing, 3XS, Catalyst 5/VX *Used with Straight with Push Handle, 8° Bend with Push Handle, Angle Adjustable with Push Handle, Half Folding or Height Adjustable Straight with Push Handle (Depth Adjustable) back posts.*	2
12, 13, 17, 18, 19b, 20	113293	Drum Brake Cable Kit with Brake Lever for 7/8" Tubing, 2XS, Catalyst 5/VX *Used with Straight with Push Handle, 8° Bend with Push Handle, Angle Adjustable with Push Handle, Half Folding or Height Adjustable Straight with Push Handle (Depth Adjustable) back posts.*	2
12, 13, 17, 18, 19c, 20	113294	Drum Brake Cable Kit with Brake Lever for 7/8" Tubing, XS, Catalyst 5/VX *Used with Straight with Push Handle, 8° Bend with Push Handle, Angle Adjustable with Push Handle, Half Folding or Height Adjustable Straight with Push Handle (Depth Adjustable) back posts.*	2
12, 13, 17, 18, 19d, 20	113295	Drum Brake Cable Kit with Brake Lever for 7/8" Tubing, Short, Catalyst 5/VX *Used with Straight with Push Handle, 8° Bend with Push Handle, Angle Adjustable with Push Handle, Half Folding or Height Adjustable Straight with Push Handle (Depth Adjustable) back posts.*	2
12, 13, 17, 18, 19e, 20	113296	Drum Brake Cable Kit with Brake Lever for 7/8" Tubing, Medium, Catalyst 5/VX *Used with Straight with Push Handle, 8° Bend with Push Handle, Angle Adjustable with Push Handle, Half Folding or Height Adjustable Straight with Push Handle (Depth Adjustable) back posts.*	2
14, 17, 18, 19d, 20	113297	Drum Brake Cable Kit with Brake Lever for 1" Tubing, Short, Catalyst 5 *Used with Stroller Handle Back Posts (Depth Adjustable)*	2

Item Number	Part Number	Description	Quantity
14, 17, 18, 19e, 20	113298	Drum Brake Cable Kit with Brake Lever for 1" Tubing, Medium, Catalyst 5 *Used with Stroller Handle Back Posts (Depth Adjustable)*	2
1 - 5, 6a, 6b, 7, 8, 9, 11, 20	113287	Drum Brake Rotor Kit with Hardware PAIR, Catalyst 5	1
1 - 5, 7, 8, 9, 11, 20	113288	Hardware Kit for Drum Brake Rotor PAIR, Catalyst 5	1
1 - 5, 6a, 7, 8, 9, 11, 20	113289	Drum Brake Rotor Kit with Hardware, Side B, Catalyst 5	1
1 - 5, 6b, 7, 8, 9, 11, 20	113290	Drum Brake Rotor Kit with Hardware, Side A, Catalyst 5	1
1 - 5, 7, 8, 9, 11, 20	113291	Hardware Kit for Drum Brake Rotor, One Side, Catalyst 5	1
4	100658	M6 Nylock Nut Blk Zn	2
7	100746	M6 Flat Washer Blk Zn	4
8	101823	M6 x 20 HHCS Blk Zn	2
10a	111731	Wheel 20" MAXX Spoke, Drum Brake	2
10b	111732	Wheel 22" MAXX Spoke, Drum Brake	2
10c	111733	Wheel 24" MAXX Spoke, Drum Brake	2
10d	118358	24" Spoke for Drum Brake, Pneumatic w/ Airless Insert Tire (Black) *Replaced part number 117432*	2
11	101191	Axle Quick Release w/ Button 1/2" x 110MM	2
12	111735	Brake Lever, Lock, Ang, 22mm *Used with Straight with Push Handle, 8° Bend with Push Handle, Angle Adjustable with Push Handle, Half Folding and Height Adjustable Straight with Push Handle (Depth Adjustable) back posts.*	2
13	001118	Cable Clip 7/8" *Not used with Stroller Handle Back Posts (Depth Adjustable)*	2
14	002673	Brake Lever, Lock, Ang, 25mm *Used with Stroller Handle Back Posts (Depth Adjustable)*	2
14, 15, 16a, 21a	506811	Stroller Handle Back Post with Grip Assembly, Short *If chair was invoiced with backrest code 50BOP032, new backcanes are not required to retrofit the drum brake. If chair was invoiced with backrest code 50BOP010, a backrest retrofit to the new Depth Adjustable Back design is required in order to retrofit the drum brake. See Catalyst Stroller Handle Back Post (Depth Adjustable) page.*	2
14, 15, 16b, 21a	506812	Stroller Handle Back Post with Grip Assembly, Tall *If chair was invoiced with backrest code 50BOP032, new backcanes are not required to retrofit the drum brake. If chair was invoiced with backrest code 50BOP010, a backrest retrofit to the new Depth Adjustable Back design is required in order to retrofit the drum brake. See Catalyst Stroller Handle Back Post (Depth Adjustable) page.*	2

Item Number	Part Number	Description	Quantity
14, 16c, 21b	112646	Stroller Handle Back Post for Removable Stroller Handle Extension, Short *If chair was invoiced with backrest code 50BOP032, new backcanes are not required to retrofit the drum brake. If chair was invoiced with backrest code 50BOP010, a backrest retrofit to the new Depth Adjustable Back design is required in order to retrofit the drum brake. See Catalyst Stroller Handle Back Post with Removable Stroller Handle Extension (Depth Adjustable) page.*	2
14, 16d, 21b	112647	Stroller Handle Back Post for Removable Stroller Handle Extension, Tall *If chair was invoiced with backrest code 50BOP032, new backcanes are not required to retrofit the drum brake. If chair was invoiced with backrest code 50BOP010, a backrest retrofit to the new Depth Adjustable Back design is required in order to retrofit the drum brake. See Catalyst Stroller Handle Back Post with Removable Stroller Handle Extension (Depth Adjustable) page.*	2
17	111806	Cable Tie, 8"	2
18	001117	Cable Clip 1" *Use quantity 2 when Straight with Push Handle, 8° Bend with Push Handle, Angle Adjustable with Push Handle, Half Folding and Height Adjustable Straight with Push Handle (Depth Adjustable) back posts are present. Use quantity 4 when Stroller Handle Back Posts (Depth Adjustable) are present.*	2
19a	111606	Cable, Drum Brake, 3XS	2
19b	111545	Cable, Drum Brake, 2XS	2
19c	111546	Cable, Drum Brake, XS	2
19d	002468	Cable, Drum Brake, Short	2
19e	002469	Cable, Drum Brake, Medium	2
20	111598	Drum Brake, Pinch Bolt	2

Drum Brake Rotor Configuration Reference

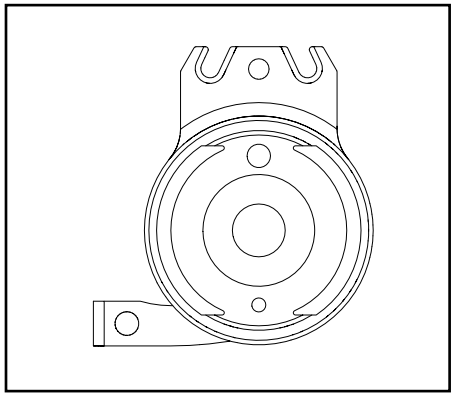

Rotor A - Part No. 111641

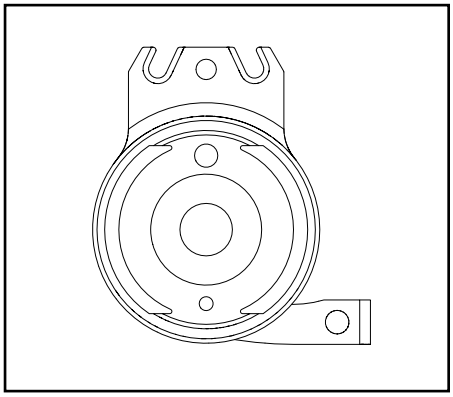

Rotor B - Part No. 111640

Catalyst 5		
Configuration	**Left**	**Right**
Axle plate curve up	B	A
Axle plate curve down	A	B

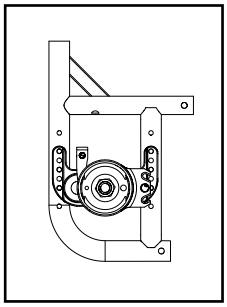

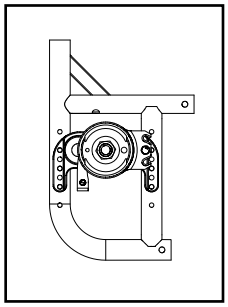

Left: Axle Plate Curve Up
Right: Axle Plate Curve Down

Catalyst 5VX		
Configuration	**Left**	**Right**
Axle Position holes 1-5 (top)	A	B
Axle Position holes 6-7 (bottom)	B	A

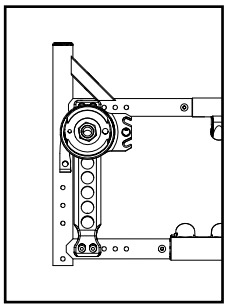

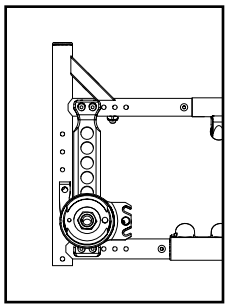

Left: Axle Position Top
Right: Axle Position Bottom

Liberty		
Configuration	**Left**	**Right**
All	B	A

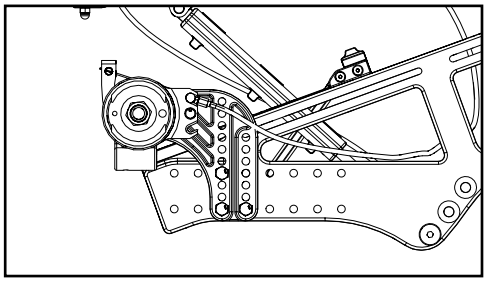

Flip		
Configuration	**Left**	**Right**
All	A	B

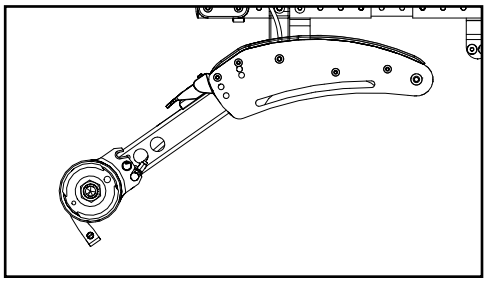

Focus		
Configuration	**Left**	**Right**
Standard (mounts above base frame)	A	B
Inverted (mounts below base frame)	B	A

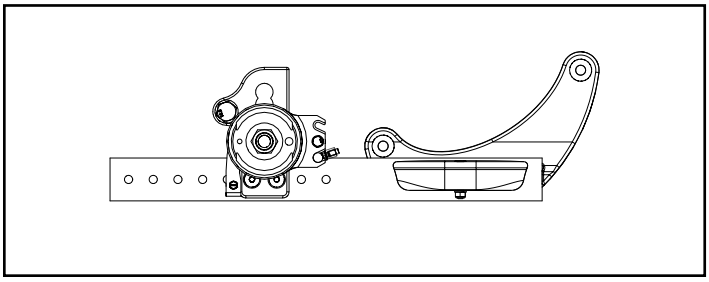

Standard Configuration

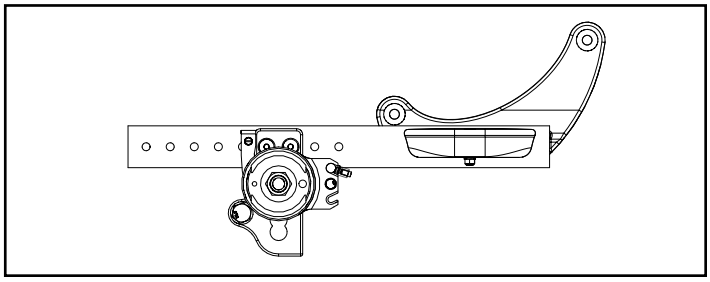

Inverted Configuration

Rigid		
Configuration	**Left**	**Right**
Tower 000925 - upper holes (14 or more exposed below clamp)	B	A
Tower 000925 - lower holes (13 or fewer holes exposed below clamp)	A	B
Tower 000926 (all hole locations)	A	B

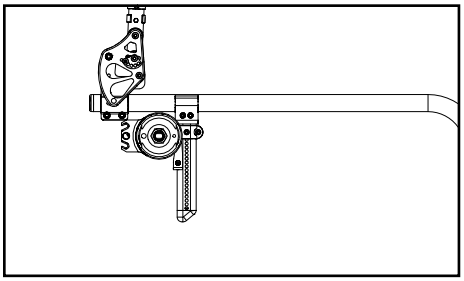

Tower 000925 - Upper Holes

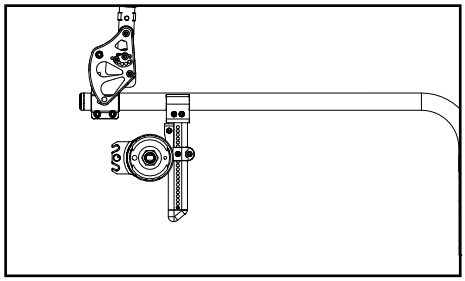

Tower 000925 - Lower Holes

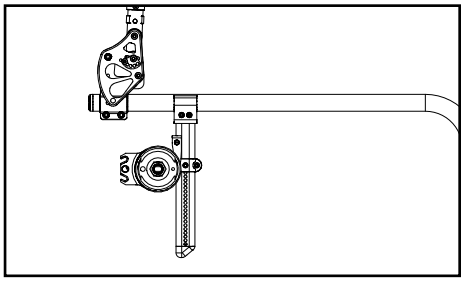

Tower 000926 - All Holes
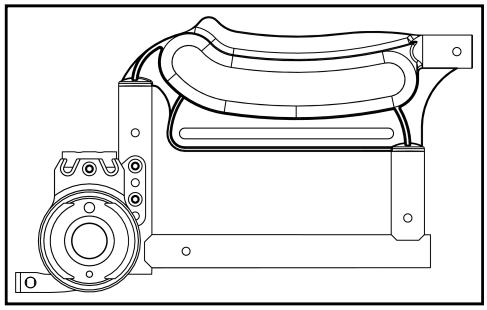
Arc		
Configuration	**Left**	**Right**
All	B	A