Flip Drum Brake (Non-Hand Tilt)

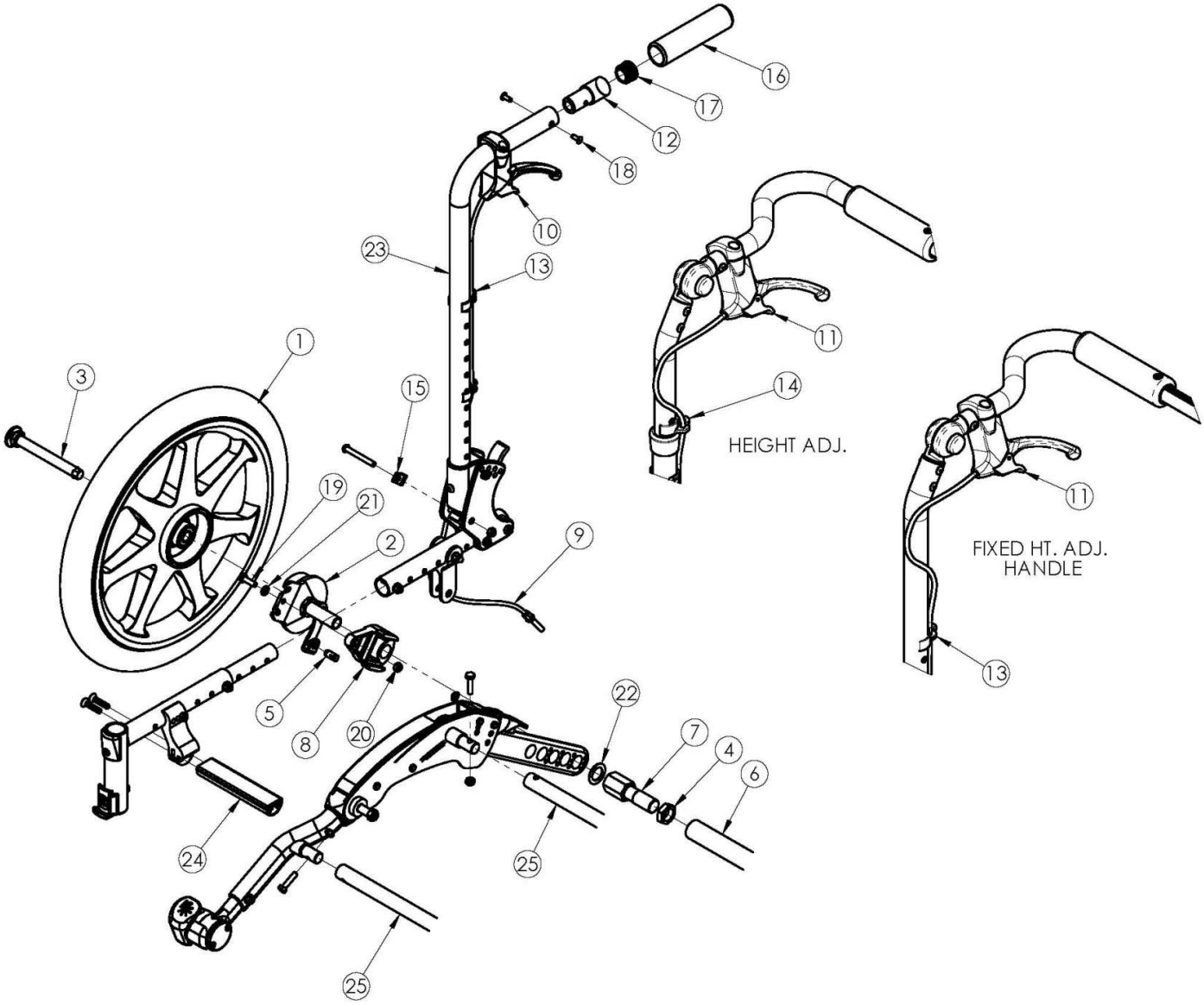

For complete retrofit, quote both drum brake retrofit kit and drum brake cable kit. Must also quote rear tires and handrims if quoting MAXX Spoke wheels. If changing wheel type and the drum brake is already present, the drum brake rotor kit with hardware is required in addition to the wheels.

Item Number	Part Number	Description	Quantity
1a, 2a, 2b, 3a, 4, 5, 6a, 7, 8, 19-22	113376	Drum Brake, 12" Mag, Pneumatic Tire, 10W Retrofit Kit FLIP	1
1a, 2a, 2b, 3a, 4, 5, 6b, 7, 8, 19-22	113377	Drum Brake, 12" Mag, Pneumatic Tire, 11W Retrofit Kit FLIP	1
1a, 2a, 2b, 3a, 4, 5, 6c, 7, 8, 19-22	113378	Drum Brake, 12" Mag, Pneumatic Tire, 12W Retrofit Kit FLIP	1

Item Number	Part Number	Description	Quantity
1a, 2a, 2b, 3a, 4, 5, 6d, 7, 8, 19-22	113379	Drum Brake, 12" Mag, Pneumatic Tire, 13W Retrofit Kit FLIP	1
1a, 2a, 2b, 3a, 4, 5, 6e, 7, 8, 19-22	113380	Drum Brake, 12" Mag, Pneumatic Tire, 14W Retrofit Kit FLIP	1
1a, 2a, 2b, 3a, 4, 5, 6f, 7, 8, 19-22	113381	Drum Brake, 12" Mag, Pneumatic Tire, 15W Retrofit Kit FLIP	1
1a, 2a, 2b, 3a, 4, 5, 6g, 7, 8, 19-22	113382	Drum Brake, 12" Mag, Pneumatic Tire, 16W Retrofit Kit FLIP	1
1a, 2a, 2b, 3a, 4, 5, 6h, 7, 8, 19-22	113383	Drum Brake, 12" Mag, Pneumatic Tire, 17W Retrofit Kit FLIP	1
1a, 2a, 2b, 3a, 4, 5, 6i, 7, 8, 19-22	113384	Drum Brake, 12" Mag, Pneumatic Tire, 18W Retrofit Kit FLIP	1
1b, 2a, 2b, 3a, 4, 5, 6a, 7, 8, 19-22	113385	Drum Brake, 12" Mag, Full Poly Tire, 10W Retrofit Kit FLIP	1
1b, 2a, 2b, 3a, 4, 5, 6b, 7, 8, 19-22	113386	Drum Brake, 12" Mag, Full Poly Tire, 11W Retrofit Kit FLIP	1
1b, 2a, 2b, 3a, 4, 5, 6c, 7, 8, 19-22	113387	Drum Brake, 12" Mag, Full Poly Tire, 12W Retrofit Kit FLIP	1
1b, 2a, 2b, 3a, 4, 5, 6d, 7, 8, 19-22	113388	Drum Brake, 12" Mag, Full Poly Tire, 13W Retrofit Kit FLIP	1
1b, 2a, 2b, 3a, 4, 5, 6e, 7, 8, 19-22	113389	Drum Brake, 12" Mag, Full Poly Tire, 14W Retrofit Kit FLIP	1
1b, 2a, 2b, 3a, 4, 5, 6f, 7, 8, 19-22	113390	Drum Brake, 12" Mag, Full Poly Tire, 15W Retrofit Kit FLIP	1
1b, 2a, 2b, 3a, 4, 5, 6g, 7, 8, 19-22	113391	Drum Brake, 12" Mag, Full Poly Tire, 16W Retrofit Kit FLIP	1
1b, 2a, 2b, 3a, 4, 5, 6h, 7, 8, 19-22	113392	Drum Brake, 12" Mag, Full Poly Tire, 17W Retrofit Kit FLIP	1
1b, 2a, 2b, 3a, 4, 5, 6i, 7, 8, 19-22	113393	Drum Brake, 12" Mag, Full Poly Tire, 18W Retrofit Kit FLIP	1
1c, 2a, 2b, 3a, 4, 5, 6a, 7, 8, 19-22	502897	Drum Brake, 16" Mag, Pneumatic Tire, 10W Retrofit Kit FLIP	1
1c, 2a, 2b, 3a, 4, 5, 6b, 7, 8, 19-22	502898	Drum Brake, 16" Mag, Pneumatic Tire, 11W Retrofit Kit FLIP	1
1c, 2a, 2b, 3a, 4, 5, 6c, 7, 8, 19-22	502899	Drum Brake, 16" Mag, Pneumatic Tire, 12W Retrofit Kit FLIP	1
1c, 2a, 2b, 3a, 4, 5, 6d, 7, 8, 19-22	502900	Drum Brake, 16" Mag, Pneumatic Tire, 13W Retrofit Kit FLIP	1

Item Number	Part Number	Description	Quantity
1c, 2a, 2b, 3a, 4, 5, 6e, 7, 8, 19-22	502901	Drum Brake, 16" Mag, Pneumatic Tire, 14W Retrofit Kit FLIP	1
1c, 2a, 2b, 3a, 4, 5, 6f, 7, 8, 19-22	502902	Drum Brake, 16" Mag, Pneumatic Tire, 15W Retrofit Kit FLIP	1
1c, 2a, 2b, 3a, 4, 5, 6g, 7, 8, 19-22	502903	Drum Brake, 16" Mag, Pneumatic Tire, 16W Retrofit Kit FLIP	1
1c, 2a, 2b, 3a, 4, 5, 6h, 7, 8, 19-22	502904	Drum Brake, 16" Mag, Pneumatic Tire, 17W Retrofit Kit FLIP	1
1c, 2a, 2b, 3a, 4, 5, 6i, 7, 8, 19-22	502905	Drum Brake, 16" Mag, Pneumatic Tire, 18W Retrofit Kit FLIP	1
1d, 2a, 2b, 3a, 4, 5, 6a, 7, 8, 19-22	502906	Drum Brake, 16" Mag, Pneumatic w/ Airless Insert Tire, 10W Retrofit Kit FLIP	1
1d, 2a, 2b, 3a, 4, 5, 6b, 7, 8, 19-22	502907	Drum Brake, 16" Mag, Pneumatic w/ Airless Insert Tire, 11W Retrofit Kit FLIP	1
1d, 2a, 2b, 3a, 4, 5, 6c, 7, 8, 19-22	502908	Drum Brake, 16" Mag, Pneumatic w/ Airless Insert Tire, 12W Retrofit Kit FLIP	1
1d, 2a, 2b, 3a, 4, 5, 6d, 7, 8, 19-22	502909	Drum Brake, 16" Mag, Pneumatic w/ Airless Insert Tire, 13W Retrofit Kit FLIP	1
1d, 2a, 2b, 3a, 4, 5, 6e, 7, 8, 19-22	502910	Drum Brake, 16" Mag, Pneumatic w/ Airless Insert Tire, 14W Retrofit Kit FLIP	1
1d, 2a, 2b, 3a, 4, 5, 6f, 7, 8, 19-22	502911	Drum Brake, 16" Mag, Pneumatic w/ Airless Insert Tire, 15W Retrofit Kit FLIP	1
1d, 2a, 2b, 3a, 4, 5, 6g, 7, 8, 19-22	502912	Drum Brake, 16" Mag, Pneumatic w/ Airless Insert Tire, 16W Retrofit Kit FLIP	1
1d, 2a, 2b, 3a, 4, 5, 6h, 7, 8, 19-22	502913	Drum Brake, 16" Mag, Pneumatic w/ Airless Insert Tire, 17W Retrofit Kit FLIP	1
1d, 2a, 2b, 3a, 4, 5, 6i, 7, 8, 19-22	502914	Drum Brake, 16" Mag, Pneumatic w/ Airless Insert Tire, 18W Retrofit Kit FLIP	1
1e, 2a, 2b, 3a, 4, 5, 6a, 7, 8, 19-22	502915	Drum Brake, 16" Mag, Full Poly Tire, 10W Retrofit Kit FLIP	1
1e, 2a, 2b, 3a, 4, 5, 6b, 7, 8, 19-22	502916	Drum Brake, 16" Mag, Full Poly Tire, 11W Retrofit Kit FLIP	1
1e, 2a, 2b, 3a, 4, 5, 6c, 7, 8, 19-22	502917	Drum Brake, 16" Mag, Full Poly Tire, 12W Retrofit Kit FLIP	1
1e, 2a, 2b, 3a, 4, 5, 6d, 7, 8, 19-22	502918	Drum Brake, 16" Mag, Full Poly Tire, 13W Retrofit Kit FLIP	1
1e, 2a, 2b, 3a, 4, 5, 6e, 7, 8, 19-22	502919	Drum Brake, 16" Mag, Full Poly Tire, 14W Retrofit Kit FLIP	1

Item Number	Part Number	Description	Quantity
1e, 2a, 2b, 3a, 4, 5, 6f, 7, 8, 19-22	502920	Drum Brake, 16" Mag, Full Poly Tire, 15W Retrofit Kit FLIP	1
1e, 2a, 2b, 3a, 4, 5, 6g, 7, 8, 19-22	502921	Drum Brake, 16" Mag, Full Poly Tire, 16W Retrofit Kit FLIP	1
1e, 2a, 2b, 3a, 4, 5, 6h, 7, 8, 19-22	502922	Drum Brake, 16" Mag, Full Poly Tire, 17W Retrofit Kit FLIP	1
1e, 2a, 2b, 3a, 4, 5, 6i, 7, 8, 19-22	502923	Drum Brake, 16" Mag, Full Poly Tire, 18W Retrofit Kit FLIP	1
1f, 2a, 2b, 3b, 4, 5, 6a, 7, 8, 19-22	113394	Drum Brake, 20" MAXX Spoke, 10W Retrofit Kit FLIP *This kit does not contain rear tires or handrims*	1
1f, 2a, 2b, 3b, 4, 5, 6b, 7, 8, 19-22	113395	Drum Brake, 20" MAXX Spoke, 11W Retrofit Kit FLIP *This kit does not contain rear tires or handrims*	1
1f, 2a, 2b, 3b, 4, 5, 6c, 7, 8, 19-22	113396	Drum Brake, 20" MAXX Spoke, 12W Retrofit Kit FLIP *This kit does not contain rear tires or handrims*	1
1f, 2a, 2b, 3b, 4, 5, 6d, 7, 8, 19-22	113397	Drum Brake, 20" MAXX Spoke, 13W Retrofit Kit FLIP *This kit does not contain rear tires or handrims*	1
1f, 2a, 2b, 3b, 4, 5, 6e, 7, 8, 19-22	113398	Drum Brake, 20" MAXX Spoke, 14W Retrofit Kit FLIP *This kit does not contain rear tires or handrims*	1
1f, 2a, 2b, 3b, 4, 5, 6f, 7, 8, 19-22	113399	Drum Brake, 20" MAXX Spoke, 15W Retrofit Kit FLIP *This kit does not contain rear tires or handrims*	1
1f, 2a, 2b, 3b, 4, 5, 6g, 7, 8, 19-22	113400	Drum Brake, 20" MAXX Spoke, 16W Retrofit Kit FLIP *This kit does not contain rear tires or handrims*	1
1f, 2a, 2b, 3b, 4, 5, 6h, 7, 8, 19-22	113401	Drum Brake, 20" MAXX Spoke, 17W Retrofit Kit FLIP *This kit does not contain rear tires or handrims*	1
1f, 2a, 2b, 3b, 4, 5, 6i, 7, 8, 19-22	113402	Drum Brake, 20" MAXX Spoke, 18W Retrofit Kit FLIP *This kit does not contain rear tires or handrims*	1
1g, 2a, 2b, 3b, 4, 5, 6a, 7, 8, 19-22	113403	Drum Brake, 22" MAXX Spoke, 10W Retrofit Kit FLIP *This kit does not contain rear tires or handrims*	1
1g, 2a, 2b, 3b, 4, 5, 6b, 7, 8, 19-22	113404	Drum Brake, 22" MAXX Spoke, 11W Retrofit Kit FLIP *This kit does not contain rear tires or handrims*	1

Item Number	Part Number	Description	Quantity
1g, 2a, 2b, 3b, 4, 5, 6c, 7, 8, 19-22	113405	Drum Brake, 22" MAXX Spoke, 12W Retrofit Kit FLIP *This kit does not contain rear tires or handrims*	1
1g, 2a, 2b, 3b, 4, 5, 6d, 7, 8, 19-22	113406	Drum Brake, 22" MAXX Spoke, 13W Retrofit Kit FLIP *This kit does not contain rear tires or handrims*	1
1g, 2a, 2b, 3b, 4, 5, 6e, 7, 8, 19-22	113407	Drum Brake, 22" MAXX Spoke, 14W Retrofit Kit FLIP *This kit does not contain rear tires or handrims*	1
1g, 2a, 2b, 3b, 4, 5, 6f, 7, 8, 19-22	113408	Drum Brake, 22" MAXX Spoke, 15W Retrofit Kit FLIP *This kit does not contain rear tires or handrims*	1
1g, 2a, 2b, 3b, 4, 5, 6g, 7, 8, 19-22	113409	Drum Brake, 22" MAXX Spoke, 16W Retrofit Kit FLIP *This kit does not contain rear tires or handrims*	1
1g, 2a, 2b, 3b, 4, 5, 6h, 7, 8, 19-22	113410	Drum Brake, 22" MAXX Spoke, 17W Retrofit Kit FLIP *This kit does not contain rear tires or handrims*	1
1g, 2a, 2b, 3b, 4, 5, 6i, 7, 8, 19-22	113411	Drum Brake, 22" MAXX Spoke, 18W Retrofit Kit FLIP *This kit does not contain rear tires or handrims*	1
1h, 2a, 2b, 3b, 4, 5, 6a, 7, 8, 19-22	113412	Drum Brake, 24" MAXX Spoke, 10W Retrofit Kit FLIP *This kit does not contain rear tires or handrims*	1
1h, 2a, 2b, 3b, 4, 5, 6b, 7, 8, 19-22	113413	Drum Brake, 24" MAXX Spoke, 11W Retrofit Kit FLIP *This kit does not contain rear tires or handrims*	1
1h, 2a, 2b, 3b, 4, 5, 6c, 7, 8, 19-22	113414	Drum Brake, 24" MAXX Spoke, 12W Retrofit Kit FLIP *This kit does not contain rear tires or handrims*	1
1h, 2a, 2b, 3b, 4, 5, 6d, 7, 8, 19-22	113415	Drum Brake, 24" MAXX Spoke, 13W Retrofit Kit FLIP *This kit does not contain rear tires or handrims*	1
1h, 2a, 2b, 3b, 4, 5, 6e, 7, 8, 19-22	113416	Drum Brake, 24" MAXX Spoke, 14W Retrofit Kit FLIP *This kit does not contain rear tires or handrims*	1
1h, 2a, 2b, 3b, 4, 5, 6f, 7, 8, 19-22	113417	Drum Brake, 24" MAXX Spoke, 15W Retrofit Kit FLIP *This kit does not contain rear tires or handrims*	1
1h, 2a, 2b, 3b, 4, 5, 6g, 7, 8, 19-22	113418	Drum Brake, 24" MAXX Spoke, 16W Retrofit Kit FLIP *This kit does not contain rear tires or handrims*	1
1h, 2a, 2b, 3b, 4, 5, 6h, 7, 8, 19-22	113419	Drum Brake, 24" MAXX Spoke, 17W Retrofit Kit FLIP	1

Item Number	Part Number	Description	Quantity
		This kit does not contain rear tires or handrims	
1h, 2a, 2b, 3b, 4, 5, 6i, 7, 8, 19-22	113420	Drum Brake, 24" MAXX Spoke, 18W Retrofit Kit FLIP *This kit does not contain rear tires or handrims*	1
1h, 2a, 2b, 3b, 4, 5, 6a, 7, 8, 19-22	118250	Drum Brake, 24" MAXX Spoke, Pneumatic w/ Airless Insert Tire (Black),10W Retrofit Kit FLIP	1
1h, 2a, 2b, 3b, 4, 5, 6b, 7, 8, 19-22	118251	Drum Brake, 24" MAXX Spoke, Pneumatic w/ Airless Insert Tire (Black), 11W Retrofit Kit, FLIP	1
1h, 2a, 2b, 3b, 4, 5, 6c, 7, 8, 19-22	118252	Drum Brake, 24" MAXX Spoke, Pneumatic w/ Airless Insert Tire (Black), 12W Retrofit Kit FLIP	1
1h, 2a, 2b, 3b, 4, 5, 6d, 7, 8, 19-22	118253	Drum Brake, 24" MAXX Spoke, Pneumatic w/ Airless Insert Tire (Black),13W Retrofit Kit FLIP	1
1h, 2a, 2b, 3b, 4, 5, 6e, 7, 8, 19-22	118254	Drum Brake, 24" MAXX Spoke, Pneumatic w/ Airless Insert Tire (Black),14W Retrofit Kit FLIP	1
1h, 2a, 2b, 3b, 4, 5, 6f, 7, 8, 19-22	118255	Drum Brake, 24" MAXX Spoke, Pneumatic w/ Airless Insert Tire (Black),15W Retrofit Kit FLIP	1
1h, 2a, 2b, 3b, 4, 5, 6g, 7, 8, 19-22	118256	Drum Brake, 24" MAXX Spoke, Pneumatic w/ Airless Insert Tire (Black),16W Retrofit Kit FLIP	1
1h, 2a, 2b, 3b, 4, 5, 6h, 7, 8, 19-22	118257	Drum Brake, 24" MAXX Spoke, Pneumatic w/ Airless Insert Tire (Black),17W Retrofit Kit FLIP	1
1h, 2a, 2b, 3b, 4, 5, 6i, 7, 8, 19-22	118258	Drum Brake, 24" MAXX Spoke, Pneumatic w/ Airless Insert Tire (Black),18W Retrofit Kit FLIP	1
1h, 2a, 2b, 3b, 4, 5, 6a, 7, 8, 19-22	502924	Drum Brake Cable Kit, Short Stroller Handle, Pair, Flip	1
1h, 2a, 2b, 3b, 4, 5, 6b, 7, 8, 19-22	502925	Drum Brake Cable Kit, Tall Stroller Handle, Pair, Flip	1
9c, 11, 13-15	502928	Drum Brake Cable Kit, Short Adjustable Height w/Adjustable Handle, Pair, Flip	1
9d, 11, 13-15	502929	Drum Brake Cable Kit, Tall Adjustable Height w/Adjustable Handle, Pair, Flip	1
9c, 11, 13, 15	505256	Drum Brake Cable Kit, Short Fixed Height with Adjustable Handle, Pair, Flip	1
9d, 11, 13, 15	505257	Drum Brake Cable Kit, Tall Fixed Height with Adjustable Handle, Pair, Flip	1
6a, 24a, 25a, 25d	502868	Strut Kit 10" Wide Flip w/ Drum Brake	1
6b, 24b, 25b, 25e	502869	Strut Kit 11" Wide Flip w/ Drum Brake	1
6c, 24c, 25c, 25f	502870	Strut Kit 12" Wide Flip w/ Drum Brake	1
6d, 24d, 25d, 25g	502871	Strut Kit 13" Wide Flip w/ Drum Brake	1
6e, 24e, 25e, 25h	502872	Strut Kit 14" Wide Flip w/ Drum Brake	1

Item Number	Part Number	Description	Quantity
6f, 24f, 25f, 25i	502873	Strut Kit 15" Wide Flip w/ Drum Brake	1
6g, 24g, 25g, 25j	502874	Strut Kit 16" Wide Flip w/ Drum Brake	1
6h, 24h, 25h, 25k	502875	Strut Kit 17" Wide Flip w/ Drum Brake	1
6i, 24i, 25i, 25l	502876	Strut Kit 18" Wide Flip w/ Drum Brake	1
2a, 2b, 3a, 4, 5, 8, 19, 20, 21, 22	113421	Drum Brake Rotor Kit for Mag Wheels with Hardware PAIR, Flip	1
2a, 2b, 3b, 4, 5, 8, 19, 20, 21, 22	113422	Drum Brake Rotor Kit for MAXX Spoke Wheels with Hardware PAIR, Flip	1
3a, 4, 5, 8, 19, 20, 21, 22	113423	Hardware Kit for Drum Brake Rotor for Mag Wheels PAIR, Flip *This kit also contains a pair of axle sleeves*	1
3b, 4, 5, 8, 19, 20, 21, 22	113424	Hardware Kit for Drum Brake Rotor for MAXX Spoke Wheels PAIR, Flip *This kit also contains a pair of axle sleeves*	1
2a, 3a, 4, 5, 8, 19, 20, 21, 22	113425	Drum Brake Rotor Kit for Mag Wheels with Hardware, Side B, Flip	1
2b, 3a, 4, 5, 8, 19, 20, 21, 22	113426	Drum Brake Rotor Kit for Mag Wheels with Hardware, Side A, Flip	1
2a, 3b, 4, 5, 8, 19, 20, 21, 22	113427	Drum Brake Rotor Kit for MAXX Spoke Wheels with Hardware, Side B, Flip	1
2b, 3b, 4, 5, 8, 19, 20, 21, 22	113428	Drum Brake Rotor Kit for MAXX Spoke Wheels with Hardware, Side A, Flip	1
3a, 4, 5, 8, 19, 20, 21, 22	113429	Hardware Kit for Drum Brake Rotor for Mag Wheels, One Side, Flip	1
3b, 4, 5, 8, 19, 20, 21, 22	113430	Hardware Kit for Drum Brake Rotor for MAXX Spoke Wheels, One Side, Flip	1
1a	111804	12" Mag Wheel with Pneumatic Tire, Drum Brake Hub	2
1b	111805	12" Mag Wheel with Full Poly Tire, Drum Brake Hub	2
1c, 2-5	002678	Drum Brake Kit, 16" Mag, Pneumatic Tire PAIR	1
1d, 2-5	002679	Drum Brake Kit, 16" Mag, Pneumatic Tire w/ Airless Insert PAIR	1
1e, 2-5	002680	Drum Brake Kit, 16" Mag, Full Poly Tire PAIR	1
1f	111731	Wheel 20" MAXX Spoke, Drum Brake	2
1g	111732	Wheel 22" MAXX Spoke, Drum Brake	2
1h	111733	Wheel 24" MAXX Spoke, Drum Brake	2
1i	118358	24" Spoke for Drum Brake, Pneumatic w/ Airless Insert Tire (Black) *Replaced kit number 117432. Does not include the handrim. Quote handrim hardware if needed.*	2
2a	113431	Drum Brake Rotor with Axle Sleeve, Side B, for Mag Wheel	1

Item Number	Part Number	Description	Quantity
2b	113432	Drum Brake Rotor with Axle Sleeve, Side A, for Mag Wheel	1
2a	113433	Drum Brake Rotor with Axle Sleeve, Side B, for MAXX Spoke Wheel	1
2b	113434	Drum Brake Rotor with Axle Sleeve, Side A, for MAXX Spoke Wheel	1
3a	101108	Axle Quick Release w/ Button 1/2" x 99MM *Used with 12" and 16" Mag wheels*	2
3b	101191	Axle Quick Release w/ Button 1/2" x 110MM *Used with MAXX Spoke wheels*	2
5	111598	Drum Brake, Pinch Bolt	2
6a	002565	Strut, Drum Brake, Ped, 10W	1
6b	002566	Strut, Drum Brake, Ped, 11W	1
6c	002567	Strut, Drum Brake, Ped, 12W	1
6d	002568	Strut, Drum Brake, Ped, 13W	1
6e	002569	Strut, Drum Brake, Ped, 14W	1
6f	002570	Strut, Drum Brake, Ped, 15W	1
6g	002571	Strut, Drum Brake, Ped, 16W	1
6h	002572	Strut, Drum Brake, Ped, 17W	1
6i	002573	Strut, Drum Brake, Ped, 18W	1
7	002675	Adapter, Strut, Drum Brake	2
8	002563	Adapter, Drum Brake, Flip	2
9a	002469	Cable, Drum Brake, Medium *Used with short stroller handle back post.*	2
9b	002470	Cable, Drum Brake, Long *Used with tall stroller handle back post.*	2
9c	002471	Cable, Drum Brake, XL *Used with short height adjustable back post and short fixed height with adjustable handle back post.*	2
9d	002472	Cable, Drum Brake, XXL *Used with tall height adjustable back post and tall fixed height with adjustable handle back post.*	2
10	002673	Brake Lever, Lock, Ang, 25mm *Used with stroller handle back posts.*	2
11	002674	Brake Lever, Lock, Str, 22mm	2

Item Number	Part Number	Description	Quantity
		Used with height adjustable back posts and fixed height with adjustable handle back post.	
13	001117	Cable Clip 1" *Use quantity 2 per stroller handle back post and fixed height with adjustable handle back post; quantity 1 per height adjustable back post.*	4
14	001118	Cable Clip 7/8" *Use quantity 1 per height adjustable back post.*	2
15	001239	P-Clip 3/16"	2
19	101823	M6 x 20 HHCS Blk Zn	2
20	100658	M6 Nylock Nut Blk Zn	2
21	100746	M6 Flat Washer Blk Zn	2
22	100583	Axle Plate Washer 18mm	2
12, 13, 16-18, 23a	503235	Stroller Handle Back Post for Drum Brake, Short, Flip	2
12, 13, 16-18, 23b	503236	Stroller Handle Back Post for Drum Brake, Tall, Flip	2
24a	001879	Strut Tube Seat 10 Wide	1
24b	001880	Strut Tube Seat 11 Wide	1
24c	001881	Strut Tube Seat 12 Wide	1
24d	001882	Strut Tube Seat 13 Wide	1
24e	001883	Strut Tube Seat 14 Wide	1
24f	001884	Strut Tube Seat 15 Wide	1
24g	001885	Strut Tube Seat 16 Wide	1
24h	001886	Strut Tube Seat 17 Wide	1
24i	001887	Strut Tube Seat 18 Wide	1
25a	002719	Frame Growth Strut 6.5" *Used on 10" wide chairs*	1
25b	002629	Frame Growth Strut 7.5" *Used on 11" wide chairs*	1
25c	002630	Frame Growth Strut 8.5" *Used on 12" wide chairs*	1
25d	002631	Frame Growth Strut 9.5" *Used on 10" and 13" wide chairs*	1
25e	002632	Frame Growth Strut 10.5"	1

Item Number	Part Number	Description	Quantity
		Used on 11" and 14" wide chairs	
25f	002633	Frame Growth Strut 11.5" *Used on 12" and 15" wide chairs*	1
25g	002634	Frame Growth Strut 12.5" *Used on 13" and 16" wide chairs*	1
25h	002635	Frame Growth Strut 13.5" *Used on 14" and 17" wide chairs*	1
25i	002636	Frame Growth Strut 14.5" *Used on 15" and 18" wide chairs*	1
25j	002637	Frame Growth Strut 15.5" *Used on 16" wide chairs*	1
25k	002638	Frame Growth Strut 16.5" *Used on 17" wide chairs*	1
25l	002639	Frame Growth Strut 17.5" *Used on 18" wide chairs*	1

Drum Brake Rotor Configuration Reference

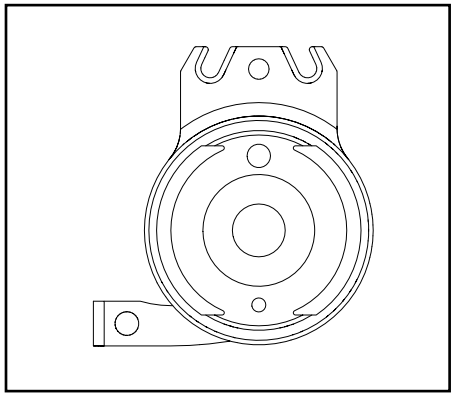

Rotor A - Part No. 111641

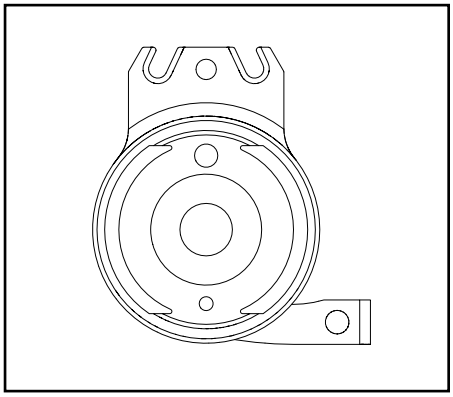

Rotor B - Part No. 111640

Catalyst 5		
Configuration	**Left**	**Right**
Axle plate curve up	B	A
Axle plate curve down	A	B

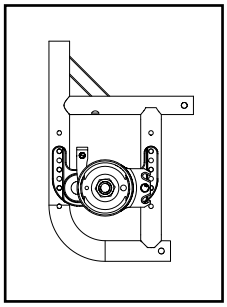

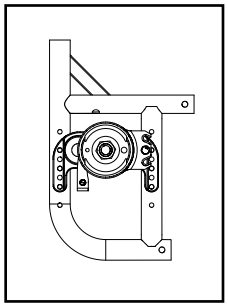

Left: Axle Plate Curve Up
Right: Axle Plate Curve Down

Catalyst 5VX		
Configuration	**Left**	**Right**
Axle Position holes 1-5 (top)	A	B
Axle Position holes 6-7 (bottom)	B	A

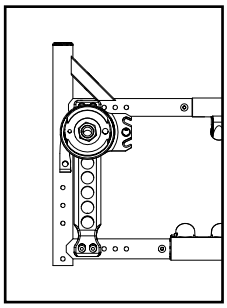

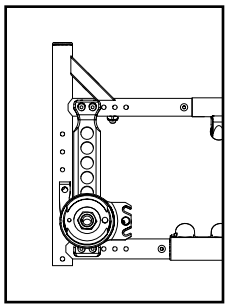

Left: Axle Position Top
Right: Axle Position Bottom

Liberty		
Configuration	**Left**	**Right**
All	B	A

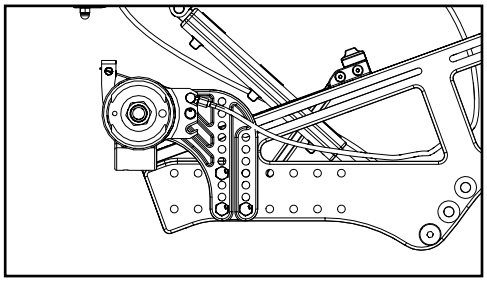

Flip		
Configuration	**Left**	**Right**
All	A	B

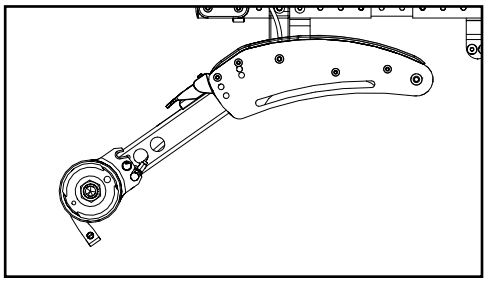

Focus		
Configuration	**Left**	**Right**
Standard (mounts above base frame)	A	B
Inverted (mounts below base frame)	B	A

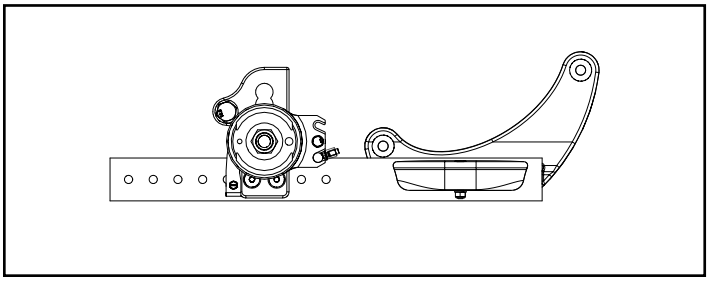

Standard Configuration

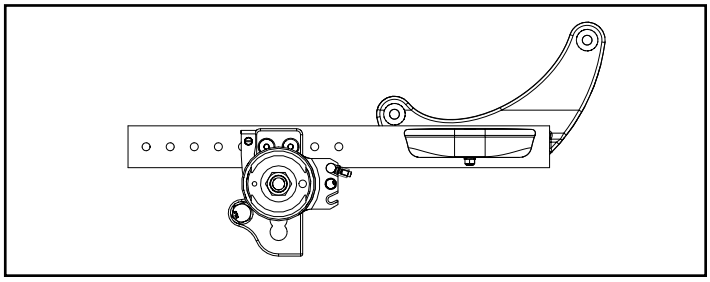

Inverted Configuration

Rigid		
Configuration	**Left**	**Right**
Tower 000925 - upper holes (14 or more exposed below clamp)	B	A
Tower 000925 - lower holes (13 or fewer holes exposed below clamp)	A	B
Tower 000926 (all hole locations)	A	B

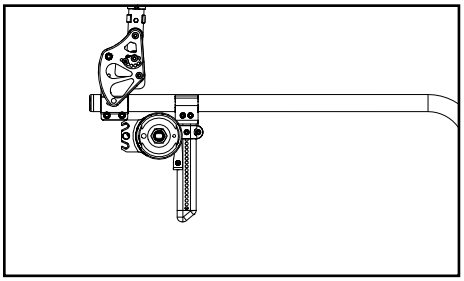

Tower 000925 - Upper Holes

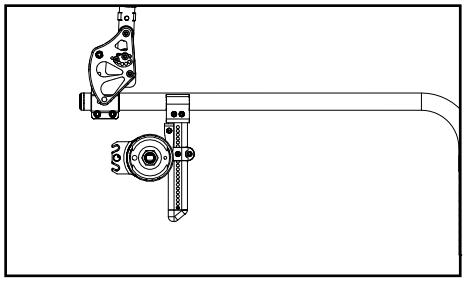

Tower 000925 - Lower Holes

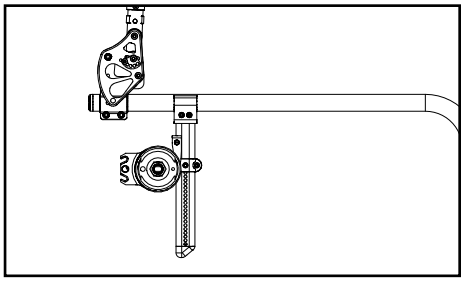

Tower 000926 - All Holes
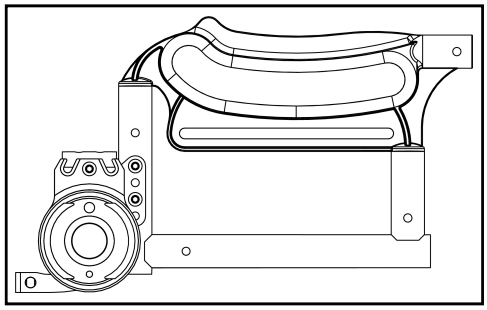
Arc		
Configuration	**Left**	**Right**
All	B	A