Focus CR Hand Tilt Mechanism Stroller Handle Back

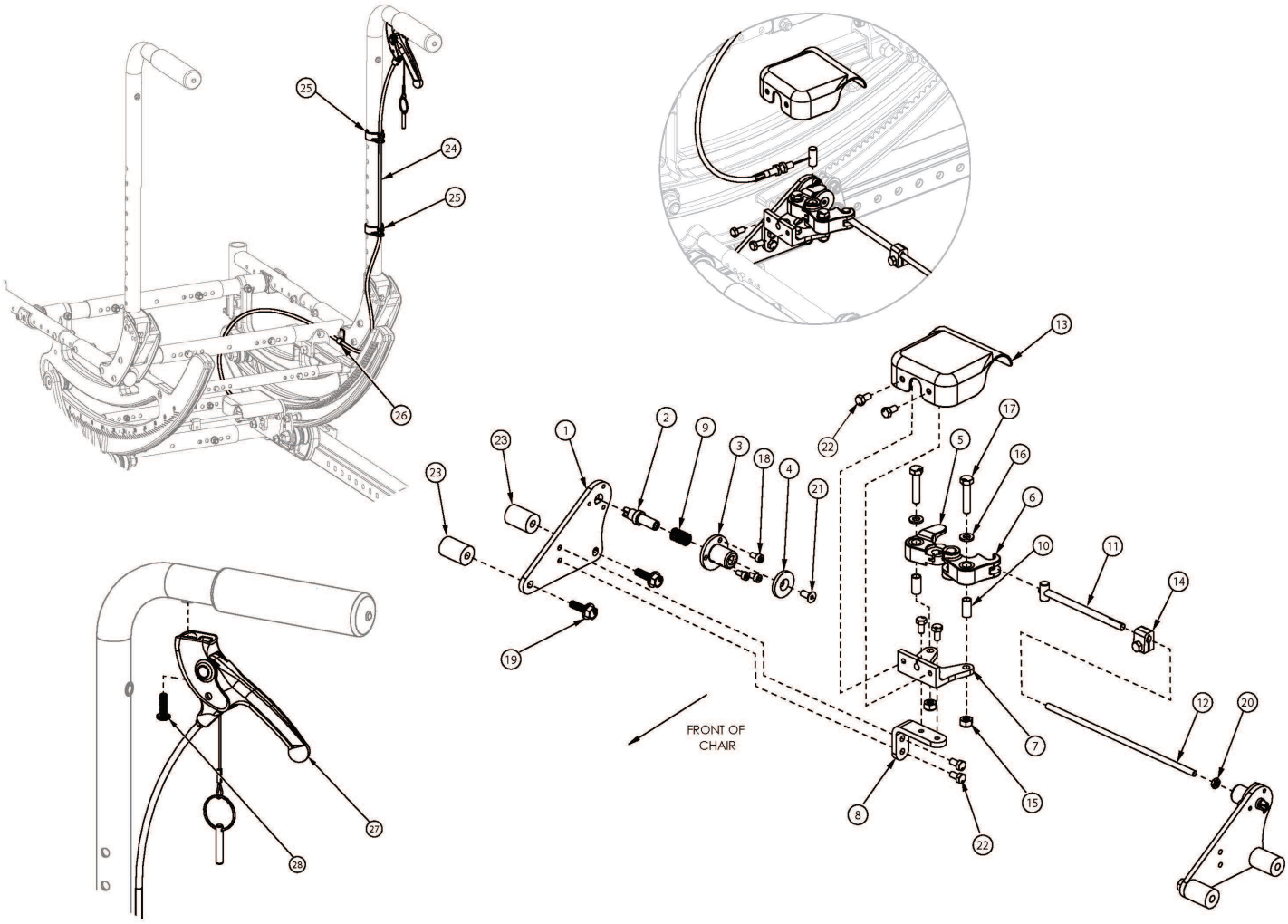

This design effective starting with serial numbers FCR0026599 and FCHD002333. If serial number is prior to FCR0026599 and FCHD002333 new back cane assemblies are required in addition to the hand tilt mechanism.

Item Number	Part Number	Description	Quantity
1-11, 12a, 13-18, 19a, 20-22	506246	Single Tilt Hand/Foot Kit, Right, Small Width Range, Focus *For complete tilt mechanism, select appropriate Hand Tilt Cable / Trigger Kit in addition to this kit*	1
1-11, 12b, 13-18, 19a, 20-22	506247	Single Tilt Hand/Foot Kit, Right, Medium Width Range, Focus *For complete tilt mechanism, select appropriate Hand Tilt Cable / Trigger Kit in addition to this kit*	1
1-11, 12c, 13-18, 19a, 20-22	506248	Single Tilt Hand/Foot Kit, Right, Large Width Range, Focus *For complete tilt mechanism, select appropriate Hand Tilt Cable / Trigger Kit in addition to this kit*	1
1-11, 12a, 13-18, 19a, 20-22	506266	Single Tilt Hand/Foot Kit, Left, Small Width Range, Focus *For complete tilt mechanism, select appropriate Hand Tilt Cable / Trigger Kit in addition to this kit*	1

Item Number	Part Number	Description	Quantity
1-11, 12b, 13-18, 19a, 20-22	506267	Single Tilt Hand/Foot Kit, Left, Medium Width Range, Focus *For complete tilt mechanism, select appropriate Hand Tilt Cable / Trigger Kit in addition to this kit*	1
1-11, 12c, 13-18, 19a, 20-22	506268	Single Tilt Hand/Foot Kit, Left, Large Width Range, Focus *For complete tilt mechanism, select appropriate Hand Tilt Cable / Trigger Kit in addition to this kit*	1
1-11, 12a, 13-18, 19b, 20-23	506249	Single Tilt Hand/Foot Kit, Right, Small Width Range, Heavy Duty, Focus *For complete tilt mechanism, select appropriate Hand Tilt Cable / Trigger Kit in addition to this kit*	1
1-11, 12b, 13-18, 19b, 20-23	506250	Single Tilt Hand/Foot Kit, Right, Medium Width Range, Heavy Duty, Focus *For complete tilt mechanism, select appropriate Hand Tilt Cable / Trigger Kit in addition to this kit*	1
1-11, 12c, 13-18, 19b, 20-23	506251	Single Tilt Hand/Foot Kit, Right, Large Width Range, Heavy Duty, Focus *For complete tilt mechanism, select appropriate Hand Tilt Cable / Trigger Kit in addition to this kit*	1
1-11, 12d, 13-18, 19b, 20-23	114279	Single Tilt Hand/Foot Kit, Right, X-Large Width Range, Heavy Duty, Focus *For complete tilt mechanism, select appropriate Hand Tilt Cable / Trigger Kit in addition to this kit*	1
1-11, 12a, 13-18, 19b, 20-23	506269	Single Tilt Hand/Foot Kit, Left, Small Width Range, Heavy Duty, Focus *For complete tilt mechanism, select appropriate Hand Tilt Cable / Trigger Kit in addition to this kit*	1
1-11, 12b, 13-18, 19b, 20-23	506270	Single Tilt Hand/Foot Kit, Left, Medium Width Range, Heavy Duty, Focus *For complete tilt mechanism, select appropriate Hand Tilt Cable / Trigger Kit in addition to this kit*	1
1-11, 12c, 13-18, 19b, 20-23	506271	Single Tilt Hand/Foot Kit, Left, Large Width Range, Heavy Duty, Focus *For complete tilt mechanism, select appropriate Hand Tilt Cable / Trigger Kit in addition to this kit*	1
1-11, 12d, 13-18, 19b, 20-23	114280	Single Tilt Hand/Foot Kit, Left, X-Large Width Range, Heavy Duty, Focus *For complete tilt mechanism, select appropriate Hand Tilt Cable / Trigger Kit in addition to this kit*	1
11, 12a, 14, 20	506263	Linkage Rod Assembly,Tilt, Small *Used with Small Frame Width Range*	1
11, 12b, 14, 20	506264	Linkage Rod Assembly,Tilt, Medium *Used with Medium Frame Width Range*	1
11, 12c, 14, 20	506265	Linkage Rod Assembly,Tilt, Large *Used with Large Frame Width Range*	1
11, 12d, 14, 20	114281	Linkage Rod Assembly, Tilt, X-Large *Used with X-Large Frame Width Range*	1
24a, 25-28	506784	Hand Tilt Cable/Trigger Kit with Medium Cable, Stroller Handle, Focus *Used with Short Stroller Handle Back Post*	1
24b, 25-28	506785	Hand Tilt Cable/Trigger Kit with Long Cable, Stroller Handle, Focus	1

Item Number	Part Number	Description	Quantity
		Used with Tall Stroller Handle Back Post	
1	004280	Mount Plate, Tilt Lock	2
2	004281	Pin, Plunger, Tilt Lock	2
3	004282	Housing, Plunger, Tilt Lock	2
4	004283	Thrust Washer, Tilt Lock	1
1-4, 9, 18, 19a	506259	Tilt Lock Mechanism Single Hand/Foot, Slave Right	1
1-4, 9, 18, 19a	506260	Tilt Lock Mechanism Single Hand/Foot, Slave Left	1
1-4, 9, 18, 19b, 23	506261	Tilt Lock Mechanism Single Hand/Foot, Heavy Duty, Slave Right	1
1-4, 9, 18, 19b, 23	506262	Tilt Lock Mechanism Single Hand/Foot, Heavy Duty, Slave Left	1
5	004284	Cam Lever, Drive, Tilt Lock	1
6	004285	Cam Lever, Slave, Tilt Lock	1
7	004286	Mount, Linkage, Dual	1
8	004289	Bracket, Mount, Tilt Lock	1
9	004290	Spring, Comp, .42OD x 1.0L x .038W	2
10	004291	Bushing, Pivot, Tilt Lock	2
11	004294	Tube Assembly, Slave, Tilt Lock	1
12a	004295	Rod, Slave, Small, 4.96" *Used with Small Width Range*	1
12b	004296	Rod, Slave, Medium, 6.96" *Used with Medium Width Range*	1
12c	004297	Rod, Slave, Large, 8.96" *Used with Large Width Range*	1
12d	112564	Rod, Slave, X-Large, 10.96" *Used with X-Large Frame Width Range*	1
13	004298	Cover, Tilt Lock	1
14	004308	Shaft Clamp, 6mm x M5	1
15	100658	M6 Nylock Nut Blk Zn	2
16	100746	M6 Flat Washer Blk Zn	2
17	101824	M6 x 30 HHCS Blk Zn	2
18	102800	M4 x 8mm SHCS Blk Zn	6

Item Number	Part Number	Description	Quantity
19a	103510	M6 x 1 x 20 HHCS SFLG CLS8.8 Blk Zn DIN6921 *Used with Standard Weight Capacity*	4
19b	103511	M6 x 1 x 45 HHCS SFLG CLS8.8 Blk Zn DIN6921 *Used with Heavy Duty Option*	4
20	103514	M5 x 0.8 Jam Nut BLK ZN DIN439B	1
21	103522	M5 x 0.8 x 12 FHCS CLS 10.9 Nyl Blk Zn DIN7991	1
22	200427	M5 x 10 CLS8.8 HHCS ZC w/Patch DIN933	6
23	001405	Spacer, .69OD x .24ID x .1.01Lg *Used with Heavy Duty Option*	4
24a	004301	Cable, Tilt, Medium *Used with Short Stroller Handle Back Post*	1
24b	004302	Cable, Tilt, Long *Used with Tall Stroller Handle Back Post*	1
25	001117	Cable Clip 1"	2
26	001239	P-Clip 3/16"	1
27	003285	Lever Assembly, Angle 135°	1
28	100734	M5 x 16 PHMS ZC	1