Focus CR Inverted Wheel Lock

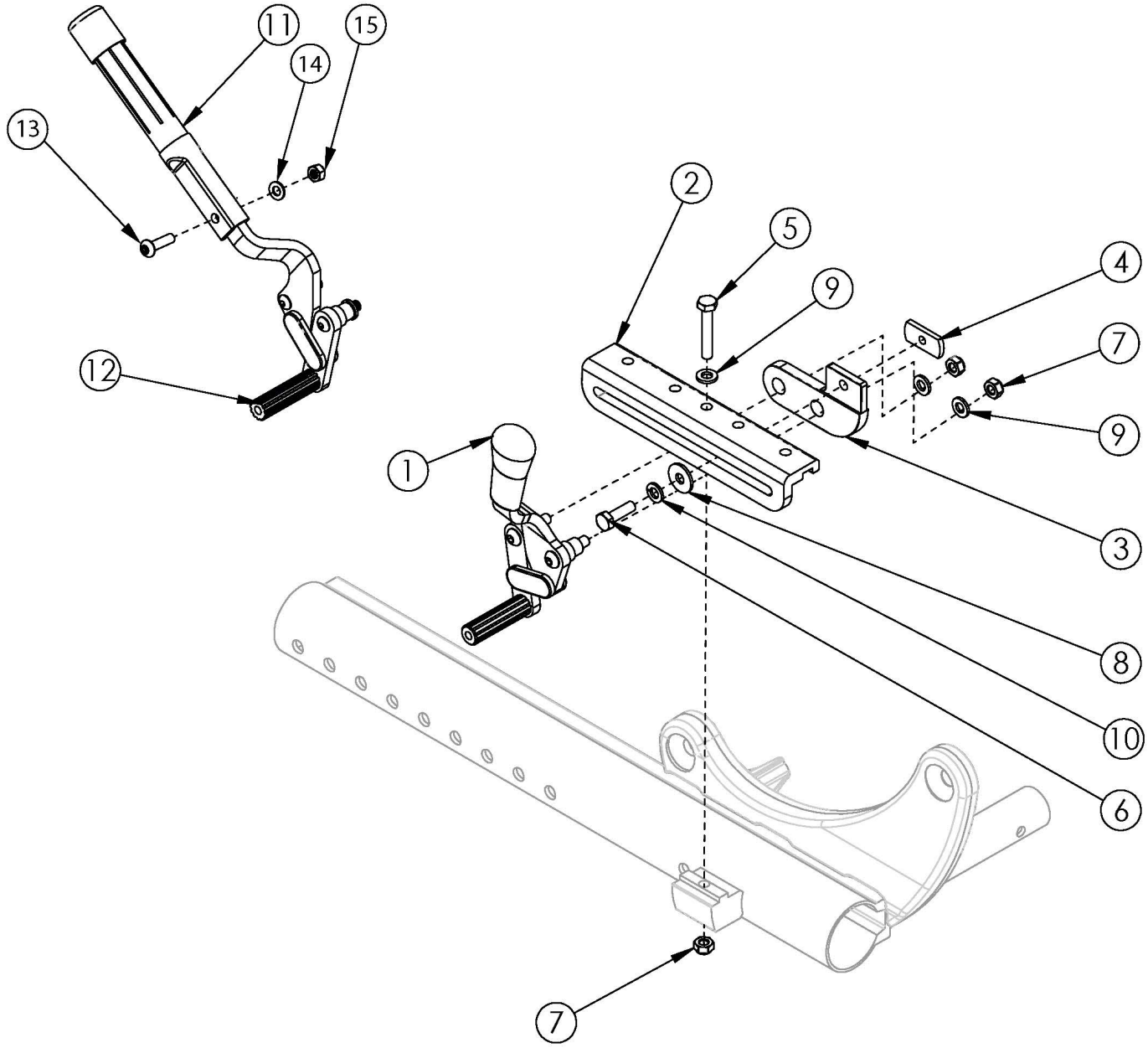

Item Number	Part Number	Description	Quantity
1a, 2, 3a, 4-10	501498	Inverted Wheel Lock Assm Push Left Focus	1
1b, 2, 3a, 4-10	501499	Inverted Wheel Lock Assm Push Right Focus	1
1a, 1b, 2, 3a, 4-10	501428	Inverted Wheel Lock Assm Push Pair Focus	1
2, 3a, 4-10, 11, 12a, 13-15	501500	Inverted Wheel Lock Assm Push with Extension Handle Left Focus	1
2, 3a, 4-10, 11, 12b, 13-15	501501	Inverted Wheel Lock Assm Push with Extension Handle Right Focus	1

Item Number	Part Number	Description	Quantity
2, 3a, 4-10, 11, 12a, 12b, 13-15	501429	Inverted Wheel Lock Assm Push with Extension Handle Pair Focus	1
1c, 2, 3b, 4-10	501502	Inverted Wheel Lock Assm Pull Left Focus	1
1d, 2, 3b, 4-10	501503	Inverted Wheel Lock Assm Pull Right Focus	1
1c, 1d, 2, 3b, 4-10	501430	Inverted Wheel Lock Assm Pull Pair Focus	1
2, 3b, 4-10, 11, 12c, 13-15	501504	Inverted Wheel Lock Assm Pull with Extension Handle Left Focus	1
2, 3b, 4-10, 11, 12d, 13-15	501505	Inverted Wheel Lock Assm Pull with Extension Handle Right Focus	1
2, 3b, 4-10, 11, 12c, 12d, 13-15	501431	Inverted Wheel Lock Assm Pull with Extension Handle Pair Focus	1
2	001398	Wheel Lock Mount Bar Inverted Axle Plate	1
3a	003774	Wheel Lock Mount Inverted Axle Plate Push/Attendant *Replaced 001396*	1
3b	003775	Wheel Lock Mount Inverted Axle Plate Pull *Replaced 001760*	1
4	001141	Weld Nut NDM 06028 Zinc	1
5	102386	M6 x 35mm HHCS Blk Zc	1
6	101823	M6 x 20 HHCS Blk Zn	1
7	100658	M6 Nylock Nut Blk Zn	3
8	101853	M6 Washer Blk Zn	1
9	100746	M6 Flat Washer Blk Zn	3
10	101835	M6 Lock Washer Blk Zn	1
11, 13-15	100854	Brake Extension Replacement	1
13	101117	M5 x 22 BTN SHCS BLK ZC	1
14	101856	Flat Washer, M5, Blk Zn	1
15	100657	M5 Nylock Nut Blk Zn	1

Inverted axle plates are not used with wheels 20" or larger.

Wheel	Tire	Caster	Standard Axle Plate Seat Heights	Inverted Axle Plate Seat Heights
12" Mag	Pneumatic	5"	13.5" - 14.5"	17.5" - 19.5"
12" Mag	Pneumatic	6"	14.5"	17.5" - 19.5"
12" Mag	Pneumatic	6x2"	14.5"	17.5" - 19.5"
12" Mag	Pneumatic	7"	n/a	17.5" - 19.5"
12" Mag	Pneumatic	8"	n/a	17" - 19.5"
12" Mag	Pneumatic	8"x1.5"	n/a	17.5" - 19.5"
12" Mag	Pneumatic	8x2"	n/a	17.5" - 19.5"
12" Mag	Full Poly	5"	n/a	16.5" - 19"
12" Mag	Full Poly	6"	n/a	16.5" - 19"
12" Mag	Full Poly	6x2"	n/a	16.5" - 19"
12" Mag	Full Poly	7"	n/a	16.5" - 19"
12" Mag	Full Poly	8"	n/a	16." - 18.5"
12" Mag	Full Poly	8"x1.5"	n/a	16.5" - 19"
12" Mag	Full Poly	8x2"	n/a	17" - 18.5"
12" Mag w/ Drum Brake	Pneumatic	5"	13" - 14.5"	17.5" - 20"
12" Mag w/ Drum Brake	Pneumatic	6"	14" - 14.5"	17.5" - 19.5"
12" Mag w/ Drum Brake	Pneumatic	6x2"	14" - 14.5"	17.5" - 20"
12" Mag w/ Drum Brake	Pneumatic	7"	n/a	17.5" - 20"
12" Mag w/ Drum Brake	Pneumatic	8"	n/a	17.5" - 20"
12" Mag w/ Drum Brake	Pneumatic	8"x1.5"	n/a	17.5" - 19.5"
12" Mag w/ Drum Brake	Pneumatic	8x2"	n/a	17.5" - 19.5"
12" Mag w/ Drum Brake	Full Poly	5"	13" - 14.5"	17.5" - 19.5"
12" Mag w/ Drum Brake	Full Poly	6"	14" - 14.5"	17.5" - 19.5"
12" Mag w/ Drum Brake	Full Poly	6x2"	14" - 14.5"	17.5" - 19.5"
12" Mag w/ Drum Brake	Full Poly	7"	n/a	17.5" - 19.5"
12" Mag w/ Drum Brake	Full Poly	8"	n/a	17.5" - 19.5"
12" Mag w/ Drum Brake	Full Poly	8"x1.5"	n/a	17.5" - 19.5"
12" Mag w/ Drum Brake	Full Poly	8x2"	n/a	17.5" - 19.5"

Inverted axle plates are not used with wheels 20" or larger.

Wheel	Tire	Caster	Standard Axle Plate Seat Heights	Inverted Axle Plate Seat Heights
16" Mag	Pneumatic	5"	13" - 16"	19" - 20.5"
16" Mag	Pneumatic	6"	14" - 16"	19" - 20.5"
16" Mag	Pneumatic	6x2"	14" - 16"	19" - 20.5"
16" Mag	Pneumatic	7"	15" - 16"	19" - 20.5"
16" Mag	Pneumatic	8"	16"	19" - 20.5"
16" Mag	Pneumatic	8"x1.5"	15.5" - 16"	19" - 20.5"
16" Mag	Pneumatic	8x2"	16"	19" - 20.5"
16" Mag	Full Poly	5"	13" - 16.5"	19" - 20.5"
16" Mag	Full Poly	6"	14" - 16.5"	19" - 20.5"
16" Mag	Full Poly	6x2"	14" - 16.5"	19" - 20.5"
16" Mag	Full Poly	7"	15" - 16.5"	19.5" - 20.5"
16" Mag	Full Poly	8"	16"	19" - 20.5"
16" Mag	Full Poly	8"x1.5"	15.5" - 16.5"	19" - 20.5"
16" Mag	Full Poly	8x2"	16" - 16.5"	19" - 20.5"
16" Mag	Low Poly	5"	13" - 15"	18" - 20"
16" Mag	Low Poly	6"	14" - 15"	18" - 20"
16" Mag	Low Poly	6x2"	14" - 15"	18" - 20.5"
16" Mag	Low Poly	7"	n/a	18" - 20.5"
16" Mag	Low Poly	8"	n/a	18" - 20.5"
16" Mag	Low Poly	8"x1.5"	n/a	18" - 20"
16" Mag	Low Poly	8x2"	n/a	18" - 20"
16" Mag w/ Drum Brake	All	5"	13.5" - 16"	19" - 20.5"
16" Mag w/ Drum Brake	All	6"	14" - 16"	18.5" - 20.5"
16" Mag w/ Drum Brake	All	6x2"	14" - 16"	18.5" - 20.5"
16" Mag w/ Drum Brake	All	7"	15" - 15.5"	18.5" - 20.5"
16" Mag w/ Drum Brake	All	8"	n/a	18.5" - 20.5"
16" Mag w/ Drum Brake	All	8"x1.5"	15.5" - 16"	18.5" - 20.5"
16" Mag w/ Drum Brake	All	8x2"	16"	18.5" - 20.5"