Catalyst E O2 Holder

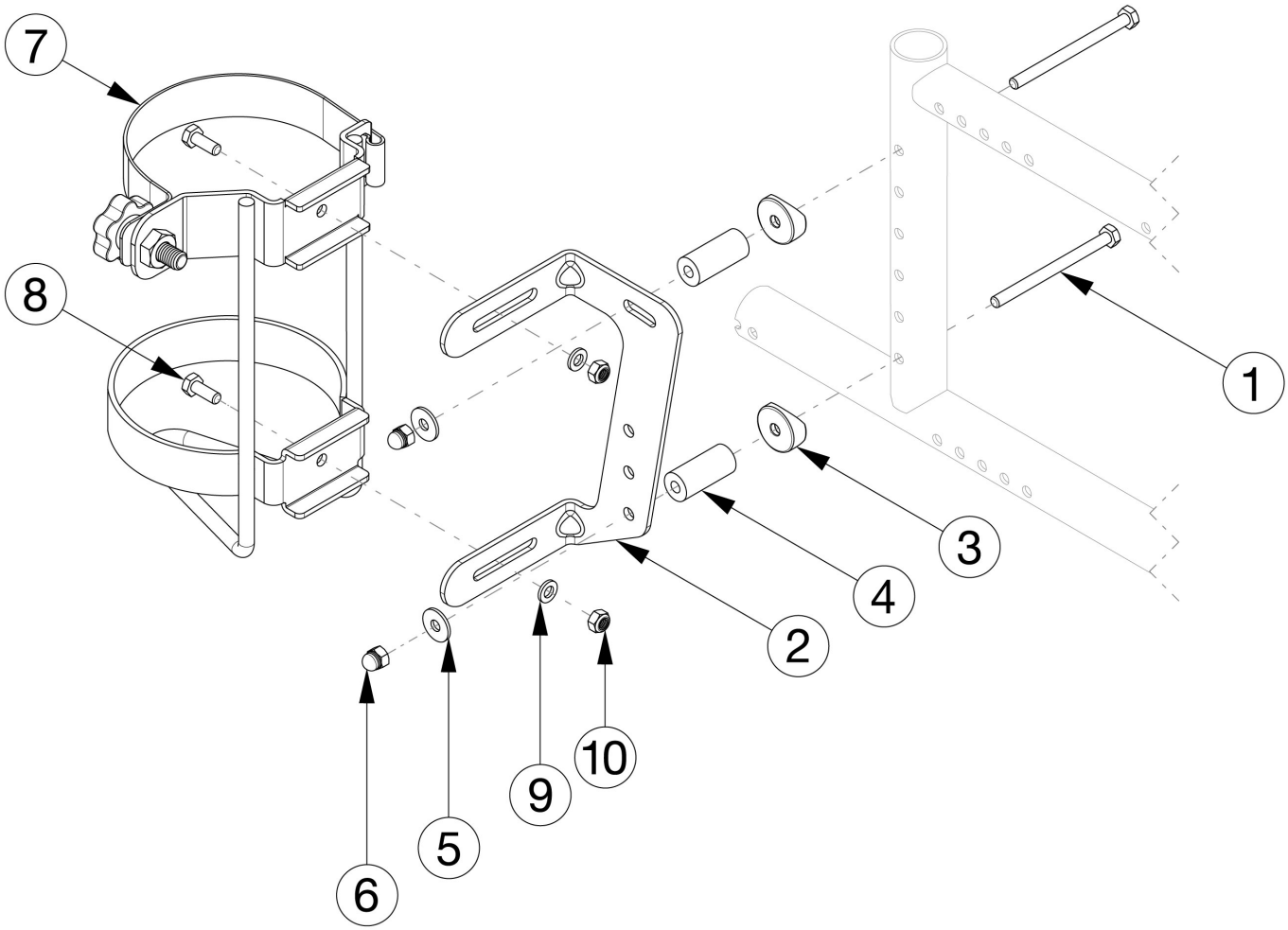

The use of Left and Right brackets are reversed. Reference the Technical Manual for configuration information.

Item Number	Part Number	Description	Quantity
1, 2a, 3 - 10	501446	O2 Holder Assembly, Catalyst Left	1
1, 2b, 3 - 10	501447	O2 Holder Assembly, Catalyst Right	1
1 - 4	501475	O2 Holder w/ Hardware CAT	1
5 - 10	102525	Hardware O2 Holder CAT	1
1	100660	M6 x 80mm CLS8.8 DIN931 HHCS ZC	2
2a	001440	O2 Holder Bracket Left CAT	1
2b	001441	O2 Holder Bracket Right CAT	1
3	000056	Saddle 1 1/8"	2

Item Number	Part Number	Description	Quantity
5	101853	M6 Washer Blk Zn	2
6	100558	M6 NYL INS Domed Cap L/N ZC	2
7	001416	O2 Holder	1
8	102327	M6 x 16 HHCS Blk Zn	2
9	100746	M6 Flat Washer Blk Zn	2
10	100658	M6 Nylock Nut Blk Zn	2