Focus CR Height Adjustable Low T-Arm

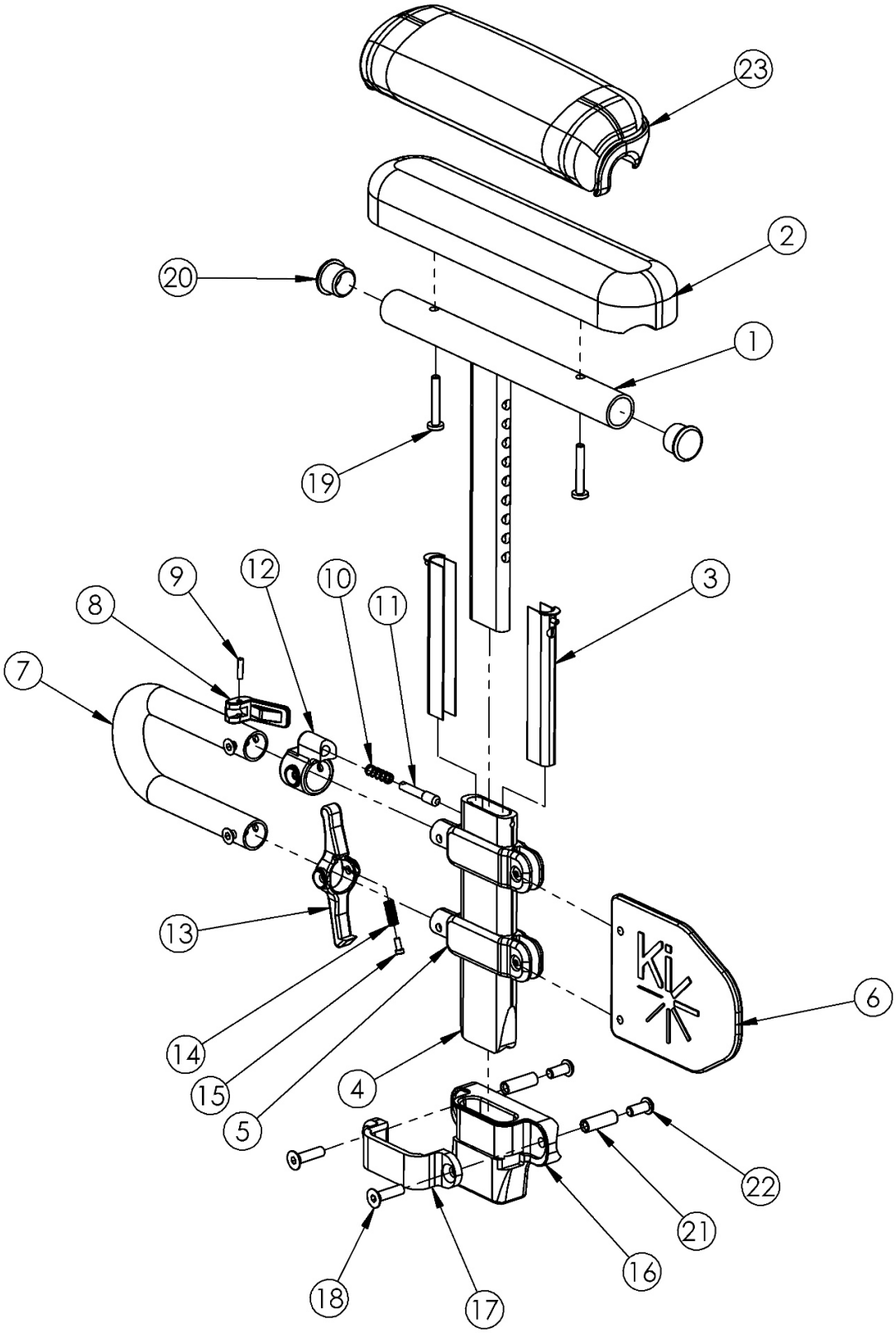

If retrofitting, Receivers are needed.

Item Number	Part Number	Description	Quantity
1a, 2b, 3-18, 19a, 20-22	113452	Height Adj T-Arm Assm Low, Desk w/ Std Pad and Receiver PAIR	1
1a, 2b, 3-18, 19a, 20-22	113347	Height Adj T-Arm Assm Low, Desk w/ Std Pad and Receiver Right	1
1a, 2b, 3-18, 19a, 20-22	113348	Height Adj T-Arm Assm Low, Desk w/ Std Pad and Receiver Left	1
1a, 2b, 3-15, 19a, 20	503167	Height Adjustable T-Arm Assembly Low, Desk w/ Std Pad Right	1
1a, 2b, 3-15, 19a, 20	503168	Height Adjustable T-Arm Assembly Low, Desk w/ Std Pad Left	1
1b, 2a, 3-18, 19a, 20-22	113453	Height Adj T-Arm Assm Low, Full w/ Std Pad and Receiver PAIR	1
1b, 2a, 3-18, 19a, 20-22	113349	Height Adj T-Arm Assm Low, Full w/ Std Pad and Receiver Right	1
1b, 2a, 3-18, 19a, 20-22	113350	Height Adj T-Arm Assm Low, Full w/ Std Pad and Receiver Left	1
1b, 2a, 3-15, 19a, 20	503169	Height Adjustable T-Arm Assembly Low, Full w/ Std Pad Right	1
1b, 2a, 3-15, 19a, 20	503170	Height Adjustable T-Arm Assembly Low, Full w/ Std Pad Left	1
1b, 3-18, 19b, 20-22, 23a	113454	Height Adj T-Arm Assm Low, Desk w/ Waterfall Pad and Receiver PAIR	1
1a, 3-18, 19b, 20-22, 23b	113351	Height Adj T-Arm Assm Low, Desk w/ Waterfall Pad and Receiver Right	1
1a, 3-18, 19b, 20-22, 23b	113352	Height Adj T-Arm Assm Low, Desk w/ Waterfall Pad and Receiver Left	1
1a, 3-15, 19b, 20, 23b	503183	Height Adjustable T-Arm Assembly Low, Desk w/ Waterfall Pad Right	1
1a, 3-15, 19b, 20, 23b	503184	Height Adjustable T-Arm Assembly Low, Desk w/ Waterfall Pad Left	1
1b, 3-18, 19b, 20-22, 23a	113455	Height Adj T-Arm Assm Low, Full w/ Waterfall Pad and Receiver PAIR	1
1b, 3-18, 19b, 20-22, 23a	113353	Height Adj T-Arm Assm Low, Full w/ Waterfall Pad and Receiver Right	1
1b, 3-18, 19b, 20-22, 23a	113354	Height Adj T-Arm Assm Low, Full w/ Waterfall Pad and Receiver Left	1
1b, 3-15, 19b, 20, 23a	503185	Height Adjustable T-Arm Assembly Low, Full w/ Waterfall Pad Right	1
1b, 3-15, 19b, 20, 23a	503186	Height Adjustable T-Arm Assembly Low, Full w/ Waterfall Pad Left	1
1a, 3-15, 20	002681	Arm T Height Adjustable Low, Desk Right Assembly	1
1a, 3-15, 20	002682	Arm T Height Adjustable Low, Desk Left Assembly	1
1b, 3-15, 20	002683	Arm T Height Adjustable Low, Full Right Assembly	1
1b, 3-15, 20	114489	Height Adjustable T-Arm, Full, Low *Replaced 002683 / 002684*	1
16-18, 21, 22	501730	Height Adj T-Arm Receiver Assm 1" CAT	1

Item Number	Part Number	Description	Quantity
1a, 20	002648	Post Weldment, T-Arm, Low, Desk	1
1b, 20	002649	Post Weldment, T-Arm, Low, Full	1
2a	100500	Arm Pad Full	1
2b	100501	Arm Pad Desk	1
3	000090	Height Adjustable T Armrest Shim	2
4	002105	Tube, Outer, T-Arm, Low	1
7	002104	Transfer Tube, T-Arm, Low	1
9	200257	Dowel Pin 1/8 x 1/2	1
10	000134	Height Adjustable Armrest Lever Spring	1
11	000099	Height Adjustable Armrest Lever Pin	1
12	000096	Height Adjustable T Armrest Pin Lock Housing	1
8-12	500541	Arm Height Adjustable T Upper Lever Assembly	1
13	002106	Lever, T-Arm, Low	1
14	000135	Height Adjustable T Armrest Release Lever Spring	1
15	000152	Height Adjustable T Armrest Release Spring Button	1
16	000087	Height Adjustable T-Arm Receiver 1"	1
17	000088	Height Adjustable T Armrest Bracket	1
18	100866	M6 x 20 CLS12.9 DIN7991 FSHCS Blk Zc w/Patch	2
19a	100696	M5 x 30mm PPH Capscrew *Used with Standard Arm Pads*	2
19b	100654	M5 x 40 DIN7985 PH Pan HD M/S ZC *Used with Waterfall Arm Pads*	2
20	100803	Tube End Plug 7/8"	2
21	000065	M6 x 23.68 Threaded Barrel	2
22	100667	M6 x 12 BTN SHCS BLKZC w/Patch	2
23a	102452	Waterfall Arm Pad Full	1
23b	102521	Waterfall Arm Pad Desk	1