Flip for Leckey Transit

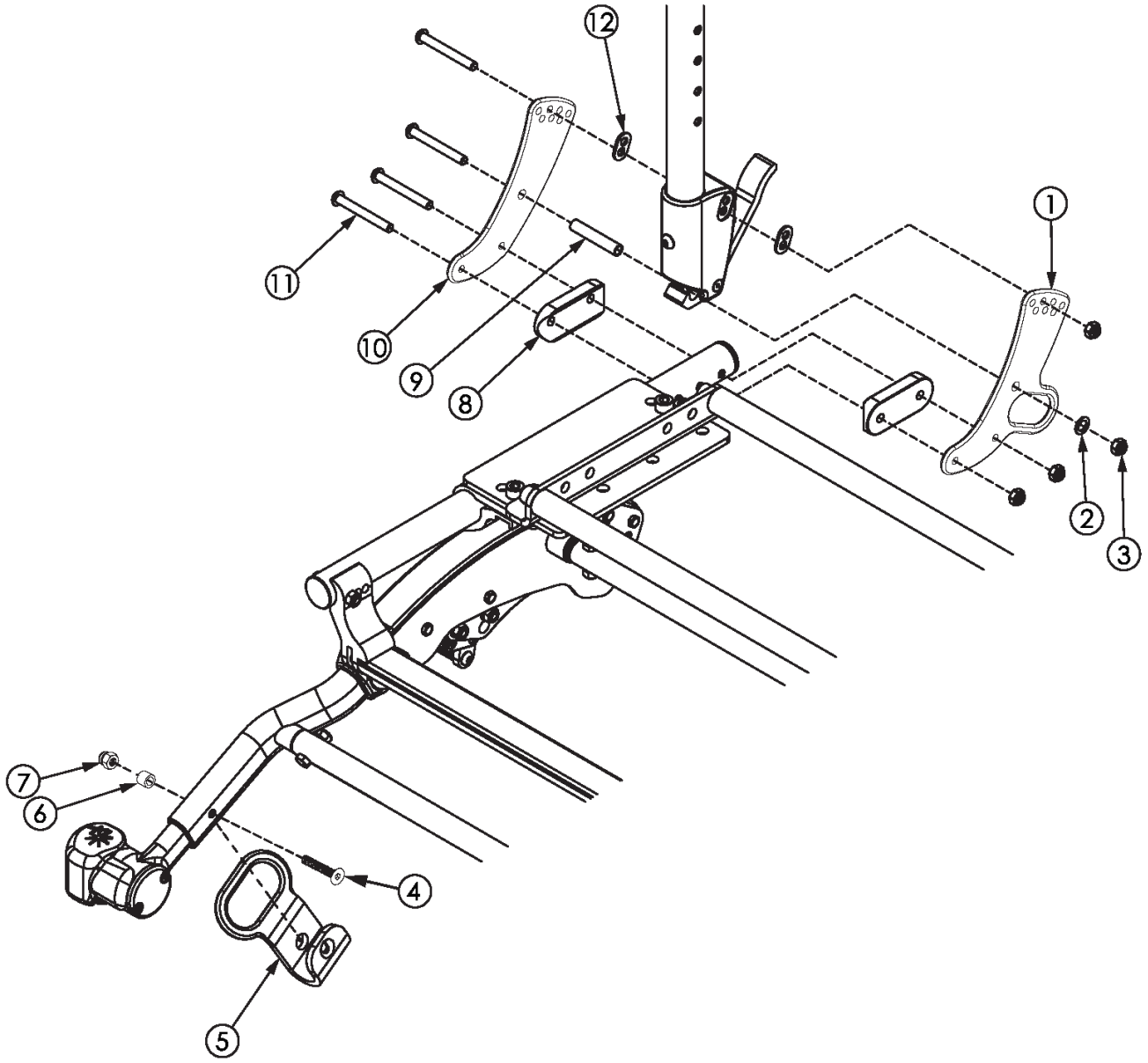

Notice: Chair configuration review required prior to parts being quoted or ordered.

Item Number	Part Number	Description	Quantity
1 - 3, 8 - 12	111271	Transit Backrest Hardware Kit, Flip for Leckey	2
1 - 12	111272	Transit Retrofit Kit, Flip for Leckey *This is a complete retrofit, containting a pair of front transit brackets, transit backplates and attaching hardware.*	1
1	111269	Inner Back Plate Transit, Flip for Leckey	2

Item Number	Part Number	Description	Quantity
2	101861	Nylon Washer 5/16 x 1/2 x .03	2
3	100658	M6 Nylock Nut Blk Zn	8
4	101733	M6 x 35 CLS10.9 DIN7991 FSHCS BLKZC	2
6	002086	Spacer, .38ODx.24IDx.31LG	2
7	100558	M6 NYL INS Domed Cap L/N ZC	2
8	002594	Saddle, Dual, 1" OD X 1.75 SP	4
9	002738	Spacer .313 OD x .243 ID x 1.68 long	2
10	001071	Back Plate Std TILT	2
11	101781	M6 x 50mm Partial Thread BHCS Blk ZC	8
12	001897	Washer, Dual, PSA	4